Chapter 5

Editing Sketched Objects-I

Learning Objectives

After completing this chapter, you will be able to:

- *Create selection sets using various object selection options.*
- *Move the objects using the **MOVE** command and copy existing objects using the **COPY** command.*
- *Copy objects with base point using the **COPYBASE** command.*
- *Use the **OFFSET** and **BREAK** commands.*
- *Fillet and chamfer objects using the **FILLET** and **CHAMFER** commands.*
- *Cut and extend objects using the **TRIM** and **EXTEND** commands.*
- *Stretch objects using the **STRETCH** command.*
- *Create polar and rectangular arrays using the **ARRAY** command.*
- *Use the **ROTATE** and **MIRROR** commands.*
- *Scale objects using the **SCALE** command.*
- *Lengthen objects such as line, arc, and spline using the **LENGTHEN** command.*
- *Use the **MEASURE** and **DIVIDE** commands.*

© CADCIM Technologies, USA. For online training, contact sales@cadcim.com

CREATING A SELECTION SET

In Chapter 2 (Getting Started with AutoCAD LT), only two options of the selection set were discussed (Window and Crossing). In this chapter, you will learn additional selection set options that can be used to select objects. The following options are explained here.

Last	CPolygon	Add	Undo	Previous
Fence	BOX	SIngle	ALL	Group
AUto	WPolygon	Remove	Multiple	

Note

The default object selection method for most of the commands is to use the pick box to select one entity at a time. If you click in a blank area using a pick box, the window or the crossing option is invoked.

Last

This option is used to select the most recently drawn object that is partially or fully visible in the current display of the screen. This is the convenient option to select the most recently drawn object that is visible on the screen. Keep in mind that if the last drawn object is not in the current display, the object in the current display that was drawn last will be selected. Although a selection set is being formed using the **Last** option, only one object is selected. However, you can use the Last option a number of times. You can use the Last selection option with any command that requires selection of objects (e.g., **COPY**, **MOVE**, and **ERASE**). After invoking the particular command, enter LAST or L at the **Select objects** prompt to use this object selection method.

Exercise 1 *General*

Using the **LINE** command, draw Figure 5-1(a). Then use the **ERASE** command with the **Last** option to erase the three most recently drawn lines to obtain Figure 5-1(d).

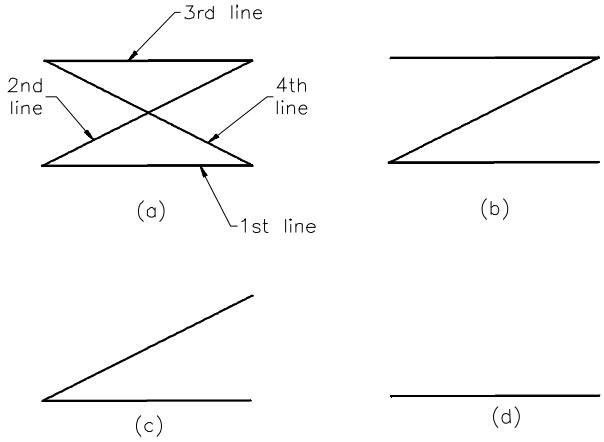

Figure 5-1 *Erasing objects using the* ***Last*** *selection option*

Previous

The **Previous** option automatically selects the objects in the most recently created selection set. To invoke this option, you can enter **P** at the **Select objects** prompt. AutoCAD LT saves the previous selection set and lets you select it again by using this option. In other words, with the help of the **Previous** option you can edit the previous set without reselecting its objects individually. Another advantage of the **Previous** option is that you need not remember the objects if more than one editing operation has to be carried out on the same set of objects. For example, if you want to copy a number of objects and then move them, you can use the **Previous** option to select the same group of objects with the **MOVE** command. The prompt sequence will be as follows.

Command: COPY Enter
Select objects: *Select the objects.*
Select objects: Enter
Specify base point or [displacement] <Displacement>: *Specify the base point.*
Specify second point of displacement or <use first point as displacement>: *Specify the point for displacement.*

Command: MOVE Enter
Select objects: **P** Enter
found

A previous selection set is cleared by the various deletion operations and the commands associated with them, like **UNDO**. You cannot select the objects in the model space and then use the same selection set in paper space, or vice versa. This is because AutoCAD LT keeps the record of the space (paper space or model space), in which the individual selection set is created.

WPolygon

This option is similar to the **Window** option, except that in this option you can define a window that consists of an irregular polygon. You can specify the selection area by specifying points around the object you want to select (Figure 5-2). Similar to the window method, all the objects to be selected using this method should be completely enclosed within the polygon. The polygon is formed as you specify the points and can take any shape except the one that is self-intersecting. The last segment of the polygon is automatically drawn to close the polygon. The polygon can be created by specifying the coordinates of the points or by specifying the points with the help of a pointing device. With the **Undo** option, the most recently specified WPolygon point can

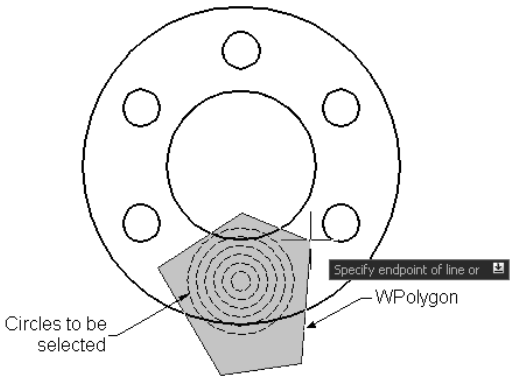

Figure 5-2 *Selecting objects using the* ***WPolygon*** *option*

© CADCIM Technologies, USA. For engineering services, contact sales@cadcim.com

be undone. To use the **WPolygon** option with object selection commands (like **ERASE**, **MOVE**, **COPY**), invoke the command, and then enter WP at the **Select objects** prompt. The prompt sequence for selecting the objects using the **WPolygon** option is given next.

Command: *Invoke any command such as **Erase**, **Move**, **Copy**, and so on.*
Select objects: **WP** Enter
First polygon point: *Specify the first point.*
Specify endpoint of line or [Undo]: *Specify the second point.*
Specify endpoint of line or [Undo]: *Specify the third point.*
Specify endpoint of line or [Undo]: *Specify the fourth point.*
Specify endpoint of line or [Undo]: *Press ENTER after specifying the last point of polygon.*

Exercise 2 — *General*

Draw a number of objects on the screen, and then erase some of them using the **WPolygon** option to select the objects you want to erase.

CPolygon

This method of selection is similar to the WPolygon method except that just like a crossing, a **CPolygon** also selects those objects that are not completely enclosed within the polygon, but touch the polygon boundaries. In other words, an object lying partially inside the polygon or even touching it is also selected, in addition to those objects that are completely enclosed within the polygon (Figure 5-3). CPolygon is formed as you specify the points. The points can be specified at the Command line or by specifying points with the pointing device. Just as in the **WPolygon** option, the crossing polygon can take any shape except the one in which it intersects itself. Also, the last segment of the polygon is drawn automatically, and so the CPolygon is closed at all times. The prompt sequence for the **CPolygon** option is given next.

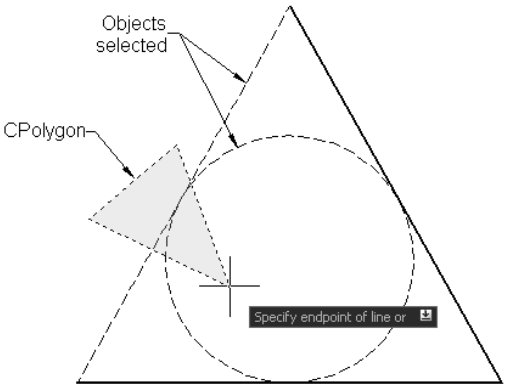

Figure 5-3 *Selecting objects using the **CPolygon** option*

Select objects: **CP** Enter
First polygon point: *Specify the first point.*
Specify endpoint of line or [Undo]: *Specify the second point.*
Specify endpoint of line or [Undo]: *Specify the third point.*
Specify endpoint of line or [Undo]: *Press ENTER after specifying the last point of the polygon.*

Remove

The **Remove** option is used to remove the objects from the selection set (but not from the drawing). After selecting many objects from a drawing by any selection method, there may be a need for removing some of the objects from the selection set. The following prompt sequence

© CADCIM Technologies, USA. For online training, contact sales@cadcim.com

displays the use of the **Remove** option for removing the objects from the selection set shown in Figure 5-4.

Command: Choose the **Erase** button.
Select objects: *Select objects (a), (b), and (c).*
Select objects: **R**
Remove objects: *Select object (a).*
1 found, 1 removed, 2 total.
Select objects: Enter

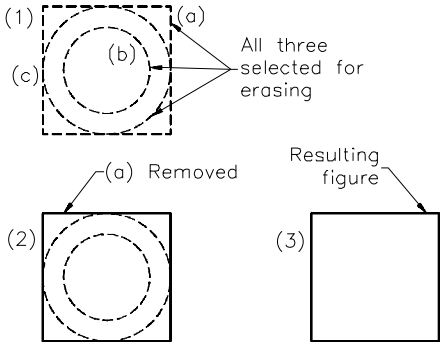

Figure 5-4 *Using the* ***Remove*** *option*

Tip
The objects can also be removed from the selection set using the SHIFT key. For example, pressing the SHIFT key and selecting object (a) with the pointing device will remove it from the selection set. AutoCAD LT will display the following message; ***1 found, 1 removed, 2 total****.*

Add

You can use the **Add** option to add objects to the selection set. When you begin creating a selection set, you are in the **Add** mode. After you create a selection set by any selection method, you can add more objects by simply selecting them with the pointing device, when the system variable **PICKADD** is set to 1 (default). When it is set to 0, to add objects to the selection set you will have to press the SHIFT key and then select the objects.

ALL

The **ALL** selection option is used to select all the objects in the current working environment of the current drawing. Note that the objects in the "OFF" layers are also selected with the **ALL** option. However, the objects that are in the frozen layers are not selected using this method. You can use this selection option with any command that requires object selection. After invoking the command, the **ALL** option can be entered at the **Select objects** prompt. Once you enter this option, all the objects drawn on the screen will be highlighted (dashed). For example, if there are four objects on the screen and you want to erase all of them, the prompt sequence is given next.

Command: Choose the **Erase** button.
Select objects: **ALL** Enter
4 found
Select objects: Enter

You can use this option in combination with the other selection options. For example, consider that there are five objects on the drawing screen and you want to erase three of them. After invoking the **ERASE** command, enter **ALL** at the **Select objects** prompt. Then press the SHIFT key and select the two objects you want to remove from the selection set; the remaining three objects are erased.

© CADCIM Technologies, USA. For engineering services, contact sales@cadcim.com

Fence

In the **Fence** option, a selection set is created by drawing an open polyline fence through the objects to be selected. Any object touched by the fence polyline is selected (Figure 5-5). The selection fence can be created by entering the coordinates at the Command line or by specifying the points with the pointing device. With this option, more flexibility for selection is provided because the fence can intersect itself. The Undo option can be used to undo the most recently selected fence point. Like the other selection options, this option is also used with the commands that need an object selection. The prompt sequence for using the **Fence** option is given next.

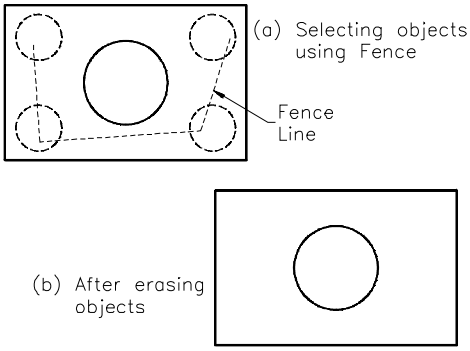

Figure 5-5 *Erasing objects using the* ***Fence*** *option*

Select objects: **F** Enter
First fence point: *Specify the first point*.
Specify endpoint of line or [Undo]: *Specify the second point.*
Specify endpoint of line or [Undo]: *Specify the third point.*
Specify endpoint of line or [Undo]: *Specify the fourth point.*
Specify endpoint of line or [Undo]: Enter

Group

The **Group** option enables you to select a group of objects by their group name. You can create a group and assign a name to it with the help of the **GROUP** command (see Chapter 18). Once a group has been created, you can select it using the **Group** option for editing purposes. This makes the object selection process easier and faster, since a set of objects is selected by entering just the group name. The prompt sequence is given next.

Command: **MOVE** Enter
Select objects: **G** Enter
Enter group name: *Enter the name of the predefined group you want to select.*
4 found
Select objects: Enter

Exercise 3 *General*

Draw six circles and select all of them to erase using the **ERASE** command with the **ALL** option. Now change the selection set contents by removing alternate circles from the selection set by using the fence so that alternate circles are erased.

BOX

When the system variable **PICKAUTO** is set to 1 (default), the **BOX** selection option is used to select the objects inside a rectangle. After you enter BOX at the **Select objects** prompt, you are

© CADCIM Technologies, USA. For online training, contact sales@cadcim.com

required to specify the two corners of a rectangle at the **Specify first corner** and the **Specify opposite corner** prompts. If you define the Box from the right to left, it is equivalent to the Crossing selection option. Hence, it also selects those objects that touch the rectangle boundaries, in addition to those that are completely enclosed within the rectangle. If you define the Box from the left to right, this option is equivalent to the Window option and selects only those objects that are completely enclosed within the rectangle. The prompt sequence is given next.

Select objects: **BOX** Enter
Specify first corner: *Specify a point.*
Specify opposite corner: *Specify opposite corner point of the box.*

AUto

The **AUto** option is used to establish automatic selection. You can select a single object, by selecting it, as well as select a number of objects, by creating a window or a crossing. If you select a single object, it is selected; if you specify a point in the blank area, you are automatically in the BOX selection option and the point you have specified becomes the first corner of the box. Auto and Add are the default selections.

Multiple

On entering **M** (Multiple) at the **Select objects** prompt, you can select multiple objects at a single **Select objects** prompt without the objects being highlighted. Once you give a null response to the **Select objects** prompt, all the selected objects are highlighted together.

Undo

This option removes the most recently selected object from the selection set.

SIngle

When you enter SI (SIngle) at the **Select objects** prompt, the selection takes place in the SIngle selection mode. Once you select an object or a number of objects using a Window or Crossing option, the **Select objects** prompt is not repeated. AutoCAD LT proceeds with the command for which the selection is made.

Command: *Choose the **Erase** button.*
Select objects: **SI** Enter
Select objects: *Select the object for erasing. The selected object is erased.*

You can also create a selection set using the **SELECT** command. The prompt sequence is given next.

Command: **SELECT** Enter
Select objects: *Use any selection method.*

© CADCIM Technologies, USA. For engineering services, contact sales@cadcim.com

EDITING SKETCHES

To use AutoCAD LT effectively, you need to know the editing commands and how to use them. In this section, you will learn about the editing commands. These commands can be invoked from the toolbar, menu, or entered at the Command prompt. Some of the editing commands such as **ERASE** and **OOPS** have been discussed in Chapter 2 (Getting Started with AutoCAD LT). The rest of them will be discussed in this section.

MOVING SKETCHED OBJECTS

Toolbar:	Modify > Move
Menu:	Modify > Move
Command:	MOVE

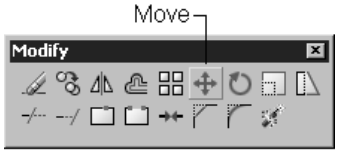

Figure 5-6 *Invoking the* ***MOVE*** *command from the* ***Modify*** *toolbar*

Sometimes, the objects are not located at the position where they actually should be. In these situations, you can use the **MOVE** command (Figure 5-6). This command allows you to move one or more objects from their current location to a new location. This change in the location of the objects does not change their size or orientation. When you invoke this command, you will be prompted to select the objects to be moved. You can use any of the object selection techniques for selecting one or more objects. Once you have selected the objects, you will be prompted to specify the base point. This base point is the reference point with which the object will be picked and moved. It is advisable to select the base point on the object selected to be moved. Next, you will be prompted to specify the second point of displacement. This is the new location point where you want to move the object. When you specify this point, the selected objects will be moved to this point. Figure 5-7 shows an object moved using the **MOVE** command. The prompt sequence that will be followed when you choose the **Move** button from the **Modify** toolbar is given next.

Select objects: *Select the objects to be moved.*
Select objects: Enter
Specify base point or [displacement] <Displacement>: *Specify the base point for moving the selected object(s).*
Specify second point or <use first point as displacement>: *Specify second point or press ENTER to use the first point.*

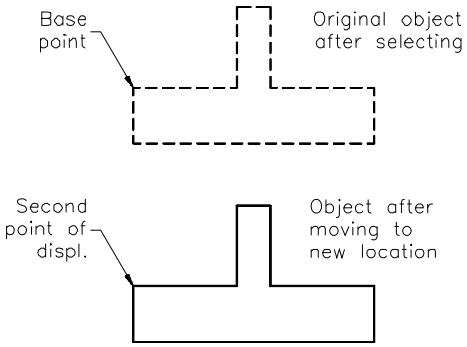

Figure 5-7 *Moving the objects to a new location*

If you press ENTER at the **Specify second point of displacement or <use first point as displacement>** prompt, AutoCAD LT interprets the first point as the relative value of the displacement in the *X* axis and *Y* axis directions. This value will be added in the *X* and *Y* axis coordinates and the object will be automatically moved to the resultant location. For example, draw a circle with its center at (3,3) and then select the center point of the circle as the base

© CADCIM Technologies, USA. For online training, contact sales@cadcim.com

point. Now, at the **Specify second point of displacement or <use first point as displacement>** prompt, press ENTER. You will notice that the circle is moved such that its center is now placed at 6,6. This is because 3 units (initial coordinates) are added along both the X and Y directions.

COPYING SKETCHED OBJECTS

Toolbar:	Modify > Copy
Menu:	Modify > Copy
Command:	COPY

The **COPY** command is used to copy an existing object. This command is similar to the **MOVE** command in the sense that it makes copies of the selected objects and places them at specified locations, but the originals are left intact. In this command, you need to select the objects and then specify the base point. Next, you are required to specify the second point. This point is where you want the copied object to be placed. Figure 5-8 shows the objects copied using this command. The prompt sequence that will be followed when you choose the **Copy Object** button from the **Modify** toolbar is given next.

Select objects: *Select the objects to copy.*
Select objects: Enter
Specify base point or [displacement]<Displacement>: *Specify the base point.*
Specify second point or <use first point as displacement>: *Specify a new position on the screen using the pointing device or entering coordinates.*
Specify second point or <use first point as displacement>: Enter

Creating Multiple Copies

You can use the **COPY** command to make multiple copies of the same object (Figure 5-9). When you select the second point of displacement, a copy is placed at this point and the prompt is automatically repeated until you press ENTER to exit the **COPY** command. You can continue to specify the points for placing multiple copies of the selected entities. You can use U (Undo) to Undo the last copied instance at any stage of the COPY command. After entering U, you can again specify the position of the last instance. The prompt sequence for the **COPY** command for multiple copies is given next.

Specify base point or displacement: *Specify the base point.*
Specify second point or <use first point as displacement>: *Specify a point for placement.*
Specify second point or <Exit/Undo>: *Specify another point for placement.*
Specify second point or <Exit/Undo>: *Specify another point for placement.*
Specify second point or <Exit/Undo>: Enter

COPYING THE OBJECT USING THE BASE POINT

Menu:	Edit > Copy with Basepoint
Command:	COPYBASE

© CADCIM Technologies, USA. For engineering services, contact sales@cadcim.com

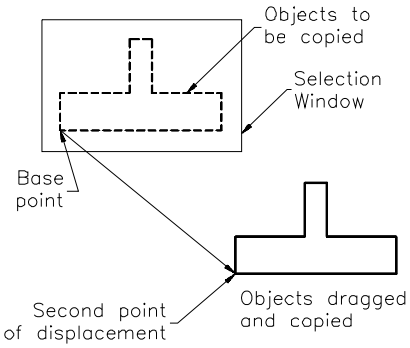

Figure 5-8 *Using the* ***COPY*** *command*

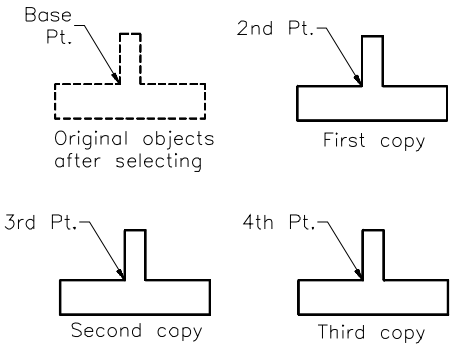

Figure 5-9 *Making multiple copies*

The command **COPYBASE** is used to specify the base point of the objects to be copied. This command can also be invoked from the shortcut menu that is displayed upon right-clicking. Choose **Copy with Base Point** to invoke this command, Figure 5-10. This command can be very useful while pasting an object very precisely in the same diagram or into another diagram. When you invoke this command from the shortcut menu, you will be prompted to specify the base point for copying the objects, and then select the objects. Unlike the **COPY** command, where the objects are dragged and placed at the desired location, this command copies the selected object on to the Clipboard. Then from the Clipboard, the objects are placed at the specified location. The Clipboard is defined as a medium for storing the data while transferring the data from one place to the other. Note that the contents of the Clipboard are not visible. The objects copied using this command can be copied from one drawing file to the other or from one working environment to the other. After copying objects with the **COPYBASE** command, you can paste the objects at the desired place with a greater accuracy.

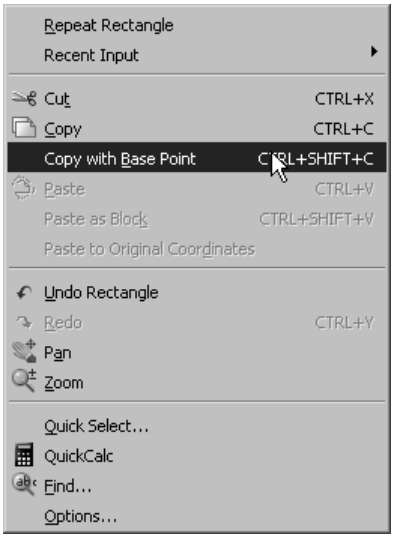

Figure 5-10 *Invoking the* ***COPYBASE*** *command from the shortcut menu*

Note

You will learn more about the working environments and the Clipboard in the following chapters.

PASTING CONTENTS FROM THE CLIPBOARD

Menu:	Edit > Paste as Block
Command:	PASTEBLOCK

© CADCIM Technologies, USA. For online training, contact sales@cadcim.com

The **PASTEBLOCK** command is used to paste the contents of the Clipboard into a new drawing or in the same drawing at a new location. You can also invoke the **PASTEBLOCK** command from the shortcut menu by right-clicking in the drawing area and choosing **Paste as Block**.

PASTING CONTENTS USING THE ORIGINAL COORDINATES

Menu:	Edit > Paste to Original Coordinates
Command:	PASTEORIG

The **PASTEORIG** command is used to paste the contents of the Clipboard into a new drawing using the coordinates from the original drawing. You can also invoke the **PASTEORIG** command from the shortcut menu by right-clicking in the drawing area and choosing **Paste to Original Coordinates**. The **PASTEORIG** command is available only when the Clipboard contains AutoCAD LT data from a drawing other than the current drawing.

Exercise 4 *Mechanical*

In this exercise, you will draw the object shown in Figure 5-11. Use the **Copy** command for creating the drawing.

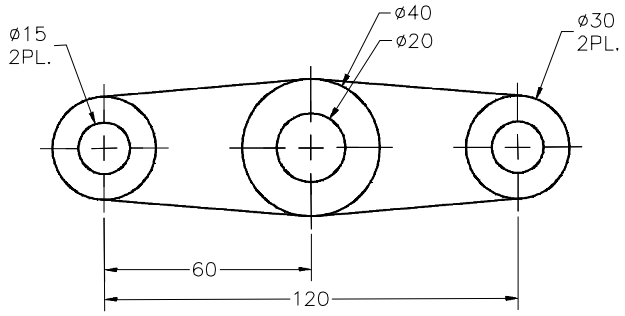

Figure 5-11 *Drawing for Exercise 4*

OFFSETTING SKETCHED OBJECTS*

Toolbar:	Modify > Offset
Menu:	Modify > Offset
Command:	OFFSET

To draw parallel lines, polylines, concentric circles, arcs, curves, and so on, you can use the **OFFSET** command (Figure 5-12). This command creates another object that is similar to the selected one. Remember that you are allowed to select only one entity at a time to be offset. When offsetting an object, you can specify the offset distance and the side to

© CADCIM Technologies, USA. For engineering services, contact sales@cadcim.com

offset, or you can specify a distance through which you want to offset the selected object. Depending on the side to offset, you can create smaller or larger circles, ellipses, and arcs. If the offset side is toward the inner side of the perimeter, the arc, ellipse, or circle will be smaller than the original. The prompt sequence that will follow when you choose the **Offset** button from the **Modify** menu is given next.

Current settings: Erase source=No Layer=Source OFFSETGAPTYPE=0
Specify offset distance or [Through/Erase/Layer] <Through>: *Specify the offset distance*
Select object to offset or [Exit/Undo]<Exit>: *Select the object to offset*
Specify point on side to offset or <Exit/Multiple/Undo>: *Specify a point on side to offset*
Select object to offset or [Exit/Undo]<Exit>*Select another object to offset or press ENTER.*

Through Option

The offset distance can be specified by entering a value or by specifying two points with the pointing device. AutoCAD LT will measure the distance between these two points and use it as the offset distance. The through option is generally used for creating orthographic views. In this case, you do not have to specify a distance; you simply specify an offset point, see Figure 5-13. The offset distance is stored in the **OFFSETDIST** system variable. A negative value indicates that the offset value is set to the Through option. You can offset lines, arcs, 2D polylines, xlines, circles, ellipses, elliptical arcs, rays, and planar splines. If you try to offset objects other than these, the message **Cannot offset that object** is displayed.

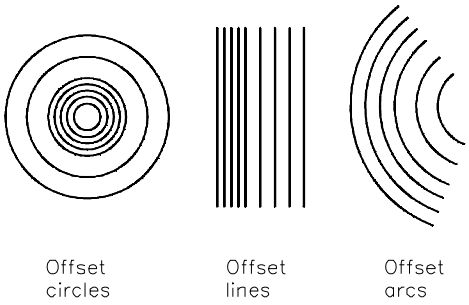

Figure 5-12 *Using the* ***OFFSET*** *command multiple times to create multiple offset entities*

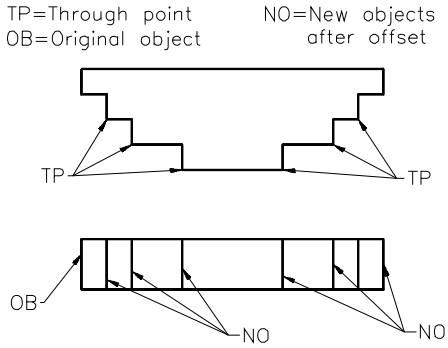

Figure 5-13 *Using the* ***Through*** *option*

Erase Option

The Erase option is used to specify whether the source object has to be deleted or not. Enter **Yes** at the **Erase source object after offsetting** prompt; the source object will be deleted after being offset. The prompt sequence that will follow when you choose the **Erase** option is given next.

Current settings: Erase source=No Layer=Source OFFSETGAPTYPE=0
Specify offset distance or [Through/Erase/Layer] <current>: E
Erase source object after offsetting? [Yes/No] <No>: Y
Specify offset distance or [Through/Erase/Layer] <current>:

© CADCIM Technologies, USA. For online training, contact sales@cadcim.com

Layer Option

Use the **Layer** option to specify whether the offset entity will be placed in the current layer or the layer of the source object. The prompt sequence for offsetting the entity in the Source layer is given next.

Current settings: Erase source=Yes Layer=Current OFFSETGAPTYPE=0
Specify offset distance or [Through/Erase/Layer] <current>: L
Enter layer option for offset objects [Current/Source] <Current>: S
Specify offset distance or [Through/Erase/Layer] <current>:

Exercise 5

General

Use the **OFFSET** edit command to draw Figures 5-14 and 5-15.

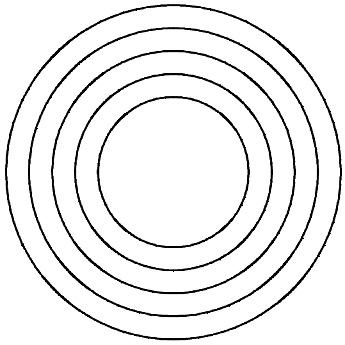

Figure 5-14 *Drawing for Exercise 5*

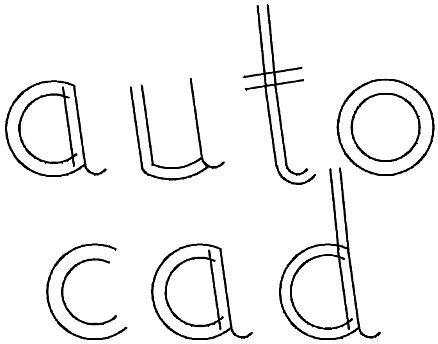

Figure 5-15 *Drawing for Exercise 5*

ROTATING SKETCHED OBJECTS

Toolbar:	Modify > Rotate
Menu:	Modify > Rotate
Command:	ROTATE

While creating designs there are many occasions when you have to rotate an object or a group of objects. You can accomplish this by using the **ROTATE** command. When you invoke this command, AutoCAD LT will prompt you to select the objects and the base point about which the selected objects will be rotated. You should be careful when selecting the base point as it is easy to get confused, if the base point is not located on a known object. After you specify the base point, you are required to enter a rotation angle. By default, positive angles produce a counterclockwise rotation and negative angles produce a clockwise rotation (Figure 5-16). The **ROTATE** command can also be invoked from the shortcut menu by selecting the object and clicking the right button in the drawing area and choosing **Rotate**. The prompt sequence that will follow when you choose the **Rotate** button is given next.

© CADCIM Technologies, USA. For engineering services, contact sales@cadcim.com

Current positive angle in UCS: ANGDIR=*current* ANGBASE=*current*
Select objects: *Select the objects for rotation.*
Select objects: Enter
Specify base point: *Specify a base point about which the selected objects will be rotated.*
Specify rotation angle or [Copy/Reference]<current>: *Enter a positive or negative rotation angle, or specify a point.*

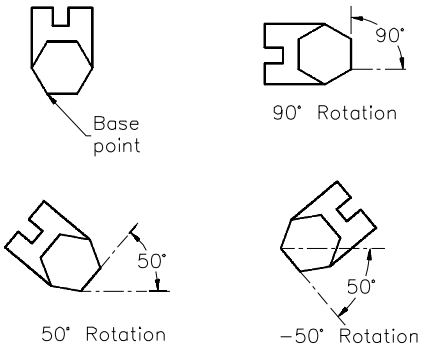

Figure 5-16 *Rotation of objects with different rotation angles*

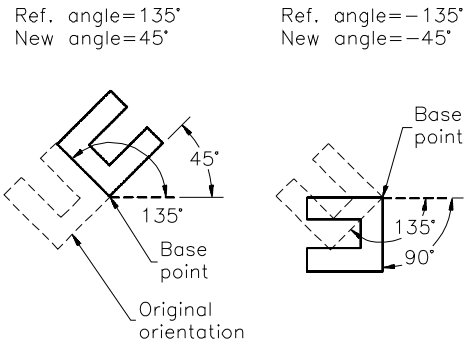

Figure 5-17 *Rotation using the* ***Reference*** *Angle option*

If you need to rotate objects with respect to a known angle, you can do this in two different ways using the **Reference** option. The first way is to specify the known angle as the reference angle, followed by the proposed angle to which the objects will be rotated (Figure 5-17). Here the object is first rotated clockwise from the *X* axis, through the reference angle. Then the object is rotated through the new angle from this reference position in a counterclockwise direction. The prompt sequence is given next.

Current positive angle in UCS: ANGDIR=*current* ANGBASE=*current*
Select objects: *Select the objects for rotation.*
Select objects: Enter
Specify base point: *Specify the base point.*
Specify rotation angle or [Copy/Reference]<current>: **R** Enter
Specify the reference angle <0>: *Enter reference angle.*
Specify the new angle: *Enter new angle.*

The other method is used when the reference angle and the new angle are not known. In this case, you can use the edges of the original object and the reference object to specify the original object and reference angle, respectively. Figure 5-18 shows a model created at an unknown angle and a line also at an unknown angle. In this case, this line will be used as a reference object for rotating the object. In such cases, remember that the base point should be taken on the reference object. This is because you cannot define two points for specifying the new angle. You have to directly enter the angle value or specify only one point. Therefore, the base point will be taken as the first point and the second point can be defined for the new angle. Figure 5-19 shows the model after rotating it with reference to the line such that the line and the model are inclined at similar angles. The prompt sequence to rotate the model in Figure 5-18 is given next.

© CADCIM Technologies, USA. For online training, contact sales@cadcim.com

Current positive angle in UCS: ANGDIR=*current* ANGBASE=*current*
Select objects: *Select the object for rotation.*
Select objects: Enter
Specify base point: *Specify the base point as the lower endpoint of the line, see Figure 5-18.*
Specify rotation angle or [Copy/Reference]<current>: **R** Enter
Specify the reference angle <0>: *Specify the first point on the edge of the model, see Figure 5-18.*
Specify second point: *Specify the second point on the same edge of the model, see Figure 5-18.*
Specify the new angle or [Points]<0>: *Select the other endpoint of the reference line, see Figure 5-18.*

You can also specify the new angle by entering the numerical value at the **Specify the new angle** prompt.

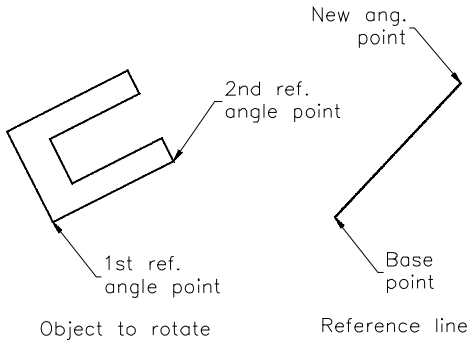

Figure 5-18 *Rotating the objects using a reference line*

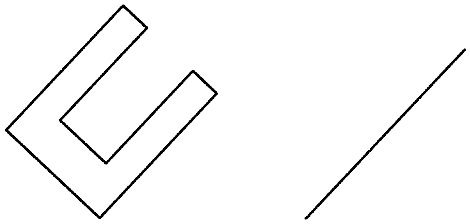

Figure 5-19 *Model after rotating with reference to the line*

If you want to retain the original object and create a copy while rotating, you can use the **Copy** option. The source entity is retained in its original orientation and a new instance is created and rotated through the specified angle. The prompt sequence with **Copy** option is given next.

Current positive angle in UCS: ANGDIR=counterclockwise ANGBASE=0
Select objects: *Select the object for rotation.*
Select objects: Enter
Specify base point: *Specify a base point about which the selected objects will be rotated.*
Specify rotation angle or [C opy/Reference] <current>: ***C*** Enter
Rotating a copy of the selected objects.
Specify rotation angle or [Copy/Reference] <current>: *Enter a positive or negative rotation angle, or specify a point.*

SCALING SKETCHED OBJECTS

Toolbar:	Modify > Scale
Menu:	Modify > Scale
Command:	SCALE

© CADCIM Technologies, USA. For engineering services, contact sales@cadcim.com

© CADCIM Technologies, USA. For online training, contact sales@cadcim.com

Many times you will need to change the size of objects in a drawing. You can do this with the **SCALE** command. This command dynamically enlarges or shrinks the selected object about a base point, keeping the aspect ratio of the object constant. This means that the size of the object will be increased or reduced equally in the X, Y, and Z directions. The dynamic scaling property allows you to view the object as it is being scaled. This can be viewed by moving the pointing device in the drawing area after selecting the base point. Application of the identical scale factor to the X, Y, and Z dimensions ensures that the shape of the objects being scaled do not change. This is a useful and timesaving editing command because instead of redrawing objects to the required size, you can scale the objects with a single **SCALE** command. Another advantage of this command is that if you have already put the dimensions on the drawing, they will also change accordingly. You can also invoke the **SCALE** command from the shortcut menu by right-clicking in the drawing area and choosing **Scale**. The prompt sequence that will follow when you choose the **Scale** button is given next.

Select objects: *Select objects to be scaled.*
Select objects: Enter
Specify base point: *Specify the base point, preferably a known point.*
Specify scale factor or [Copy/Reference]<current>: *Specify the scale factor.*

The base point will not be moved from its position and the selected object(s) will be scaled around the base point, as shown in Figures 5-20 and 5-21. To reduce the size of an object, the scale factor should be less than 1 and to increase its size, the scale factor should be greater than 1. You can enter a scale factor or select two points to specify a distance as a factor. When you select two points to specify a distance as a factor, the first point should be on the referenced object.

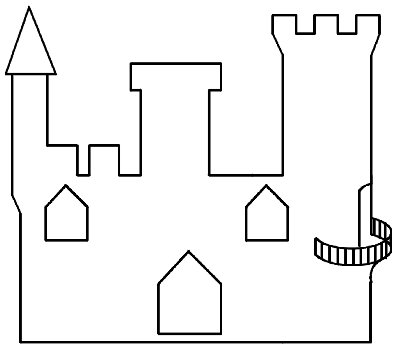

Figure 5-20 *Original object before scaling*

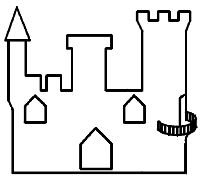

Figure 5-21 *After scaling to 0.5 of the actual size*

Sometimes it is time-consuming to calculate the relative scale factor. In such cases, you can scale the object by specifying a desired size in relation to the existing size (a known dimension). In other words, you can use a **reference length**. This can be done by entering **R** at the **Specify scale factor or [Copy/Reference]** prompt. Then, you either specify two points to specify the length or enter a length. At the next prompt, enter the length relative to the reference length. For example, if a line is **2.5** units long and you want its length to be **1.00** units, instead of

calculating the relative scale factor, you can use the **Reference** option. The prompt sequence for using the **Reference** option is given next.

Select objects: *Select the object to scale.*
Select objects: Enter
Specify base point: *Specify the base point.*
Specify scale factor or [Copy/Reference]<current>: **R** Enter
Specify reference length <1>: *Specify the reference length.*
Specify new length: *Specify the new length.*

Similar to the **ROTATE** command, here also you can scale one object using the reference of another object. Again, the base point has to be taken on the reference object as you can define only one point for the new length.

You can use the **Copy** option to retain the source object and scale the copied instance of the source object. The command prompt for using the **Copy** option is given next.

Select objects: *Select the object to scale.*
Select objects: Enter
Specify base point: *Specify the base point.*
Specify scale factor or [Copy/Reference] <current>: **C** Enter
Scaling a copy of the selected objects.
Specify scale factor or [Copy/Reference] <current>: *Specify the scale factor.*

Tip

*If you have not used the required drawing units for a drawing, you can use the **Reference** option of the **SCALE** command to correct the error. Select the entire drawing with the help of the All selection option. Specify the **Reference option**, and then select the endpoints of the object whose desired length you know. Specify the new length, and all objects in the drawing will be scaled automatically to the desired size.*

FILLETING SKETCHES

Toolbar:	Modify > Fillet
Menu:	Modify > Fillet
Command:	FILLET

The edges in the design are generally filleted to reduce the area of stress concentration. The **FILLET** command helps you form round corners between any two entities by allowing you to define two entities that form a sharp vertex. The result is that a smooth round arc is created that connects the two objects. A fillet can also be created between two intersecting or parallel lines as well as nonintersecting and nonparallel lines, arcs, polylines, xlines, rays, splines, circles, and true ellipses. The fillet arc created will be tangent to both the selected entities. The default fillet radius is 0.0000. As a result, when you invoke this command, you first need to specify the radius value. The prompt sequence that will follow when you choose the **Fillet** button is given next.

© CADCIM Technologies, USA. For engineering services, contact sales@cadcim.com

Current Settings: Mode= TRIM, Radius= 0.0000
Select first object or [Undo/Polyline/Radius/Trim/Multiple]:

Creating Fillets Using the Radius Option

The fillet you create depends on the radius distance you specify. The default radius is 0.0000. You can enter a distance or two points. The new radius you enter becomes the default radius and remains in effect until changed. The prompt sequence is given next.

Select first object or [Undo/Polyline/Radius/Trim/Multiple]: **R** Enter
Specify fillet radius <current>: *Enter a fillet radius or press ENTER to accept the current value.*

Note
*The **FILLETRAD** system variable controls and stores the current fillet radius. The default value of this variable is 0.0000.*

You can also fillet 3D objects in different planes. This is discussed in later chapters.

Tip
A fillet with a zero radius creates sharp corners and is used to clean up lines at corners if they overlap or have a gap.

Creating Fillets Using The Select First Object Option

This is the default method to fillet two objects. As the name implies, it prompts for the first object required for filleting. The prompt sequence to use this option is given next.

Current Settings: Mode= TRIM, Radius= modified value
Select first object or [Undo/Polyline/Radius/Trim/Multiple]: *Specify first object.*
Select second object: *Select second object.*

The **FILLET** command can also be used to cap the ends of two parallel lines, see Figure 5-22. The cap is a semicircle whose radius is equal to half the distance between the two parallel lines. The cap distance is calculated automatically when you select the two parallel lines for filleting. You can select lines with the Window, Crossing, or Last option, but to avoid unexpected results, select the objects by picking objects individually. Also, selection by picking objects is necessary in the case of arcs and circles that have the possibility of more than one fillet. They are filleted closest to the select points, as shown in Figure 5-23.

Creating Fillets Using The Trim Option

When you create a fillet, an arc is created and the selected objects are either trimmed or extended at the fillet endpoint. This is because the **Trim** mode is set to **Trim**. If it is set to **No Trim** they are left intact. Figure 5-24 shows a model filleted with the **Trim** mode set to **Trim** and to **No Trim**. The prompt sequence is given next.

Select first object or [Undo/Polyline/Radius/Trim/Multiple]: **T** Enter

© CADCIM Technologies, USA. For online training, contact sales@cadcim.com

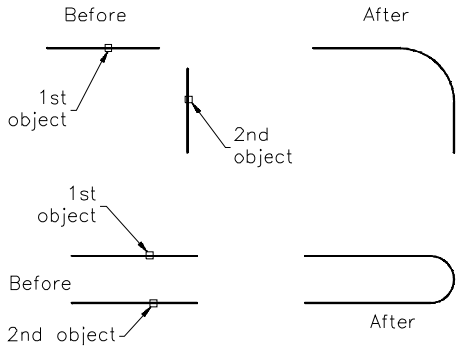

Figure 5-22 *Filleting the parallel and nonparallel lines*

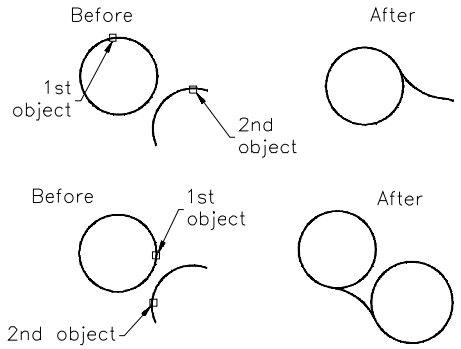

Figure 5-23 *Using the* ***FILLET*** *command on circles and arcs*

Specify Trim mode option [Trim/No trim] <current>: *Enter* **T** *to trim the edges,* **N** *to leave them intact. You can also choose the required option from the dynamic prompt.*

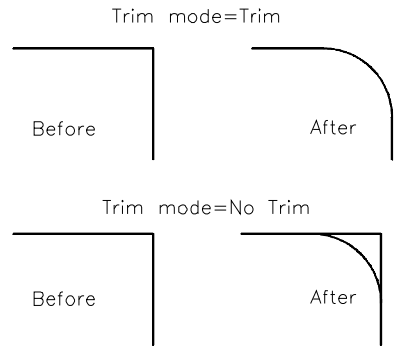

Figure 5-24 *Filleting the lines with the* ***Trim*** *mode set to* ***Trim*** *and* ***No Trim***

Creating Fillets Using The Polyline Option

Using the **Polyline** option, you can fillet a number of entities that comprise a single polyline (Figure 5-25). The polylines can be created using the **POLYLINE** or the **RECTANG** command. If the object is created using the **POLYLINE** command, it must be closed using the **Close** option. Otherwise, the last corner of the polyline will not be filleted. When you select this option, AutoCAD LT prompts you to select a polyline. All the vertices of the polyline are filleted when you select the polyline. The fillet radius for all the vertices will be the same. If the selected polyline is not closed, then the last corner is not filleted. The prompt sequence for using this option is given next.

Current Settings: Mode= *current*, Radius= *current*
Select first object or [Undo/Polyline/Radius/Trim/Multiple]: **P** Enter
Select 2D polyline: *Select the polyline.*

Creating Fillets Using The Multiple Option

When you invoke the **Fillet** command, by default the fillet is created between a single set of entities only. But with the help of the **Multiple** option, you can add fillets to more than one set of entities. When you select this option, AutoCAD LT prompts you to select the first object and then the second object. A fillet will be created between the two entities. Next, you are again prompted to select the first object and then the second object. This prompt continues until you

© CADCIM Technologies, USA. For engineering services, contact sales@cadcim.com

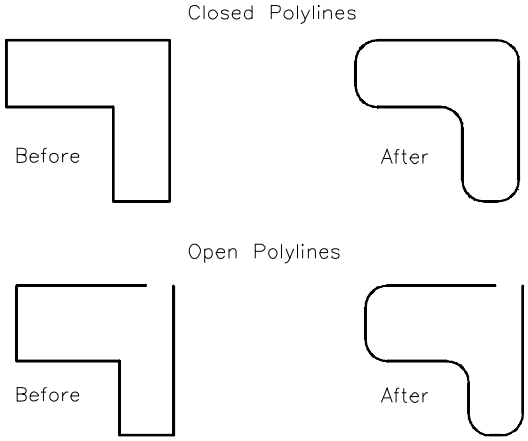

Figure 5-25 *Filleting closed and open polylines*

press ENTER to terminate the **Fillet** command. The prompt sequence to use this option is given next.

Current Settings: Mode= TRIM, Radius= current
Select first object or [Undo/Polyline/Radius/Trim/Multiple]: **M** Enter
Select first object or [Undo/Polyline/Radius/Trim/Multiple]: *Specify first object of one set.*
Select second object: *Select second object of the same set.*
Select first object or [Undo/Polyline/Radius/Trim/Multiple]: *Specify first object of the other set.*
Select second object: *Select second object of the same set.*
Select first object or [Undo/Polyline/Radius/Trim/Multiple]: *Specify first object of the other set or press* Enter

Note
*Use the **Undo** option to go back to the previous fillet when you fillet entities using the **Multiple** option.*

Filleting Objects with a Different UCS

The fillet command will also fillet objects that are not in the current UCS plane. To create a fillet for these objects, AutoCAD LT will automatically change the UCS transparently so that it can generate a fillet between the selected objects.

Note
Filleting objects in different planes is discussed in detail in Chapter 23 (Getting Started with 3D).

Setting the TRIMMODE System Variable

The **TRIMMODE** system variable eliminates any size restriction on the **FILLET** command. By setting **TRIMMODE** to **0**, you can create a fillet of any size without actually cutting the existing

© CADCIM Technologies, USA. For online training, contact sales@cadcim.com

geometry. Also, there is no restriction on the fillet radius. This means that the fillet radius can be larger than one or both objects that are being filleted. The default value of this variable is 1.

Note

TRIMMODE = 0 *Fillet or chamfer without cutting the existing geometry.*
TRIMMODE = 1 *Extend or trim the geometry.*

CHAMFERING SKETCHES

Toolbar:	Modify > Chamfer
Menu:	Modify > Chamfer
Command:	CHAMFER

Chamfering the sharp corners is another method of reducing the areas of stress concentration in the design. Chamfering is defined as the process, in which the sharp edges or corners are beveled. In simple words, it is defined as the taper provided on a surface. A beveled line connects two separate objects to create a chamfer. The size of a chamfer depends on its distance from the corner. If a chamfer is equidistant from the corner in both directions, it is a 45-degree chamfer. A chamfer can be drawn between two lines that may or may not intersect. However, remember that the lines are not parallel because parallel lines cannot be chamfered. This command also works on a single polyline. In AutoCAD LT, the chamfers can be created using two methods: by defining two distances, or by defining one distance and the chamfer angle. The prompt sequence that will follow, when you choose the **Chamfer** button from the **Modify** toolbar is given next.

(TRIM mode) Current chamfer Dist1 = 0.0000, Dist2 = 0.0000
Select first line or [Undo/Polyline/Distance/Angle/Trim/mEthod/Multiple]:

Creating Chamfer Using The Distance Option

This option is used to enter the chamfer distance. The default values of the distances are 0.0000 and 0.0000. This option can be invoked by entering **D** at the **Select first line or [Polyline/Distance/Angle/Trim/Method/mUltiple]** prompt. Next, enter the first and second chamfer distances. The first distance is the distance of the corner calculated along the edge selected first. Similarly, the second distance is calculated along the edge that is selected last. The new chamfer distances remain in effect until you change them. Instead of entering the distance values, you can specify two points to indicate each distance, see Figure 5-26. The prompt sequence is given next.

Select first line or [Undo/Polyline/Distance/Angle/Trim/mEthod/Multiple]:

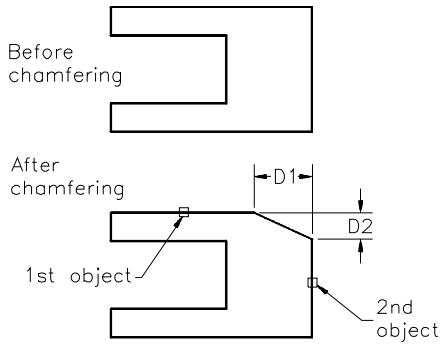

Figure 5-26 *Chamfering the model using the* ***Distance*** *option*

© CADCIM Technologies, USA. For engineering services, contact sales@cadcim.com

D Enter
Specify first chamfer distance <0.0000>: *Enter a distance value or specify two points.*
Specify second chamfer distance <0.0000>: *Enter a distance value or specify two points.*

The first and second chamfer distances are stored in the **CHAMFERA** and **CHAMFERB** system variables. The default value of these variables is 0.0000.

Tip
*If Dist 1 and Dist 2 are set to zero, the **CHAMFER** command will extend or trim the selected lines so that they end at the same point.*

Creating Chamfer Using The Select First Line Option

In this option, you need to select two nonparallel objects so that they are joined with a beveled line. The size of the chamfer depends upon the values of the two distances. The prompt sequence is given next.

(TRIM mode) Current chamfer Dist1 = current, Dist2 = current
Select first line or [Undo/Polyline/Distance/Angle/Trim/mEthod/Multiple]: *Specify the first line.*
Select second line: *Select the second line.*

Creating Chamfer Using The Polyline Option

You can use the **CHAMFER** command to chamfer all corners of a closed or open polyline, as shown in Figure 5-27. With a closed polyline, all the corners of the polyline are chamfered to the set distance values. Sometimes the polyline may appear closed. But, if the last segment **was not created using the** Close option, it may not actually be closed. In this case, the last corner is not chamfered. The prompt sequence is given next.

(TRIM mode) Current chamfer Dist1 = current, Dist2 = current
Select first line or [Undo/Polyline/Distance/Angle/Trim/mEthod/Multiple]: **P** Enter
Select 2D polyline: *Select the polyline.*

Creating Chamfer Using The Angle Option

The second method of creating the chamfer is by specifying a distance and the chamfer angle, as shown in Figure 5-28. The chamfer angle can be defined using this option. The prompt sequence is given next.

Select first line or [Undo/Polyline/Distance/Angle/Trim/mEthod/Multiple]: **A** Enter
Specify chamfer length on the first line <current>: *Specify a length.*
Specify chamfer angle from the first line <current>: *Specify an angle.*

Creating Chamfer Using The Trim Option

Depending on this option, the selected objects are either trimmed or extended to the endpoints of the chamfer line or left intact. The prompt sequence is given next.

© CADCIM Technologies, USA. For online training, contact sales@cadcim.com

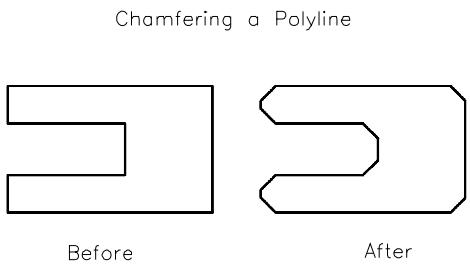

Figure 5-27 Chamfering a polyline

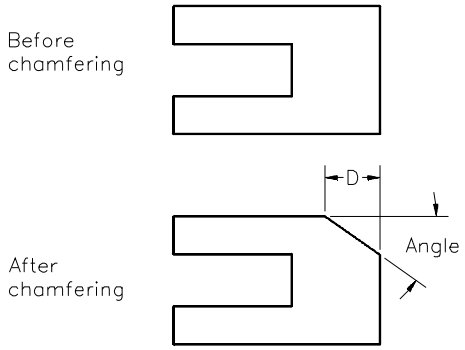

*Figure 5-28 Chamfering using the **Angle** option*

Select first line or [Undo/Polyline/Distance/Angle/Trim/mEthod/Multiple]: **T** Enter
Enter Trim mode option [Trim/No Trim] <current>:

Creating Chamfer Using The Method Option

This option is used to toggle between the **Distance** method and the **Angle** method for creating the chamfer. The current settings of the selected method will be used for creating the chamfer. The prompt sequence is given next.

Select first line or [Undo/Polyline/Distance/Angle/Trim/mEthod/Multiple]: **mE** Enter
Enter trim method [Distance/Angle] <current>: *Enter* **D** *for Distance option*, **A** *for Angle option.*

Note

*If you set the value of the **TRIMMODE** system variable to **1** (default value), the objects will be trimmed or extended after they are chamfered and filleted. If **TRIMMODE** is set to zero, the objects are left untrimmed.*

Creating Chamfer Using The Multiple Option

When you invoke the **Chamfer** command, by default the chamfer is created between a single set of entities only. But with the help of the **Multiple** option you can add chamfers to the multiple sets of entities. When you select this option, AutoCAD LT prompts you to select the first line and then the second line. The chamfer is added to the two selected lines Next, you are again prompted to select the first line and then the second line. This prompt continues until you press ENTER to terminate the **Chamfer** command. The prompt sequence that follows to create multiple chamfers is given next.

(TRIM mode) Current chamfer Dist1 = current, Dist2= current
Select first line or [Undo/Polyline/Distance/Angle/Trim/mEthod/Multiple]: **M** Enter
Select first line or [Undo/Polyline/Distance/Angle/Trim/mEthod/Multiple]: *Specify first line of one set.*

© CADCIM Technologies, USA. For engineering services, contact sales@cadcim.com

Select second line: *Select second line of the same set.*
Select first line or [Undo/Polyline/Distance/Angle/Trim/mEthod/Multiple]: *Specify first line of the other set.*
Select second line: *Select second line of the same set.*
Select first line or [Undo/Polyline/Distance/Angle/Trim/mEthod/Multiple]: *Specify first line of the other set or press* Enter *to terminate the* ***Chamfer*** *command.*

Note
Use the ***Undo*** *option to go back to the previous chamfer when you are chamfering entities using* ***Multiple*** *option.*

Setting the Chamfering System Variables

The chamfer modes, distances, length, and angle can also be set using the following variables.

CHAMMODE = 0	Distance/Distance (default)
CHAMMODE = 1	Length/Angle
CHAMFERA	Sets first chamfer distance on the first selected line (default = 0.0000)
CHAMFERB	Sets second chamfer distance on the second selected line (default = 0.0000)
CHAMFERC	Sets the chamfer length (default = 0.0000)
CHAMFERD	Sets the chamfer angle from the first line (default = 0)

TRIMMING SKETCHED OBJECTS

Toolbar:	Modify > Trim
Menu:	Modify > Trim
Command:	TRIM

When creating a design, there are a number of places where you have to remove the unwanted and extending edges. Breaking individual objects takes time if you are working on a complex design with many objects. In such cases, you can use the **TRIM** command. This command trims the objects that extend beyond a required point of intersection. When you invoke this command, you will be prompted to select the cutting edges or boundaries. These edges can be lines, polylines, circles, arcs, ellipses, xlines, rays, splines, text, blocks, or even viewports. There can be more than one cutting edge and you can use any selection method to select them. After the cutting edge or edges are selected, you must select each object to be trimmed. An object can be both a cutting edge and an object to be trimmed. You can trim lines, circles, arcs, polylines, splines, ellipses, xlines, and rays. The prompt sequence is given next.

Current settings:Projection=UCS Edge=None
Select cutting edges...
Select objects<select all>: *Select the cutting edges.*
Select objects: Enter
Select object to trim or Shift-select to extend or [Fence/Crossing/Project/Edge/eRase/Undo]:

© CADCIM Technologies, USA. For online training, contact sales@cadcim.com

Select object to trim Option

Here you have to specify the objects you want to trim and the side from which the object will be trimmed. This prompt is repeated until you press ENTER. This way you can trim several objects with a single **TRIM** command (Figure 5-29). The prompt sequence is given next.

Current settings: Projection= UCS Edge= None
Select cutting edges...
Select objects<select all>: *Select the first cutting edge.*
Select objects: *Select the second cutting edge.*
Select objects: Enter
Select object to trim or shift-select to extend or [Fence/Crossing/Project/Edge/eRase/Undo]: *Select the first object.*
Select object to trim or shift-select to extend or [Fence/Crossing/Project/Edge/eRase/Undo]: *Select the second object.*
Select object to trim or shift-select to extend or [Fence/Crossing/Project/Edge/eRase/Undo]: Enter

Shift-select to extend Option

This option is used to switch to the extend mode. It is used to extend the object instead of trimming. In case the object to extend does not intersect with the cutting edge, you can press the SHIFT key and then select the object to be extended. The selected edge will be extended taking the cutting edge as the boundary for extension.

Edge Option

This option is used whenever you want to trim those objects that do not intersect the cutting edges, but would intersect if the cutting edges were extended, see Figure 5-30. The prompt sequence is given next.

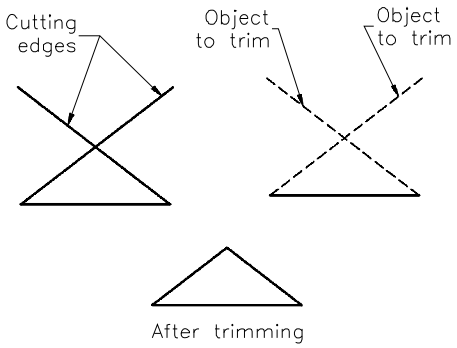

Figure 5-29 *Using the* ***TRIM*** *command*

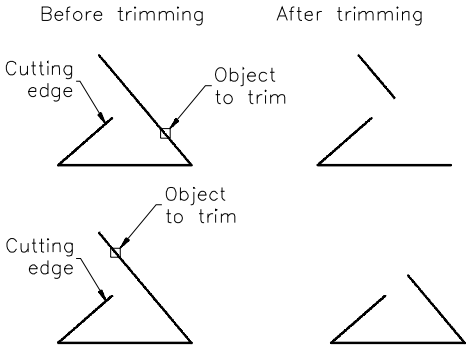

Figure 5-30 *Trimming an object using the* ***Edge*** *option (****Extend****)*

© CADCIM Technologies, USA. For engineering services, contact sales@cadcim.com

Command: **TRIM** Enter
Current settings: Projection= UCS Edge= None
Select cutting edges...
Select objects: *Select the cutting edge.*
Select objects: Enter
Select object to trim or shift-select to extend or [Fence/Crossing/Project/Edge/eRase/Undo]: **E** Enter
Enter an implied edge extension mode [Extend/No extend] <current>: **E** Enter
Select object to trim or shift-select to extend or [Fence/Crossing/Project/Edge/eRase/Undo]: *Select object to trim.*

Project Option

In this option, you can use the Project mode while trimming objects. The prompt sequence is given next.

Select object to trim or shift-select to extend or [Fence/Crossing/Project/Edge/eRase/Undo]: **P** Enter
Enter a projection option [None/Ucs/View] <current>:

The **None** option is used whenever the objects to trim intersect the cutting edges in 3D space. If you want to trim those objects that do not intersect the cutting edges in 3D space, but do visually appear to intersect in a particular UCS or the current view, use the **UCS** or **View** options. The UCS option projects the objects to the *XY* plane of the current UCS, while the **View** option projects the objects to the current view direction (trims to their apparent visual intersections).

Fence Option

As discussed earlier, the **Fence** option is used for the selection purpose. With the **Fence** option all the objects crossing the selection fence are selected. The prompt sequence for the fence option is given next.

Select object to trim or shift-select to extend or [Fence/Crossing/Project/Edge/eRase/Undo]: **F** Enter
Specify first fence point: Specify the first point of the fence
Specify next fence point or [Undo]: Specify the second point of the fence
Specify next fence point or [Undo]: Specify the third point of the fence
Specify next fence point or [Undo]: Enter

Crossing Option

The **Crossing** option is used to select the entities using a crossing window. The objects touching the window boundries or completely enclosed are selected. The prompt sequence is given next.

Select object to trim or shift-select to extend or [Fence/Crossing/Project/Edge/eRase/Undo]: C Enter
Specify first corner: *Select the first corner of the crossing window.*
Specify opposite corner: *Select the first corner of the crossing window.*

© CADCIM Technologies, USA. For online training, contact sales@cadcim.com

Erase Option

The **Erase** option in **Trim** command is used to erase the entities without cancelling the **Trim** command.

Select object to trim or shift-select to extend or [Fence/Crossing/Project/Edge/eRase/Undo]: R Enter
Select objects to erase or <exit>: Select object to erase
Select objects to erase: Select object to erase or Enter
Select objects to erase: Enter

Undo Option

If you want to remove the previous change created by the **TRIM** command, enter **U** at the **Select object to trim or** [Fence/Crossing/Project/Edge/eRase/Undo] prompt.

Exercise 6 *Mechanical*

Draw the top illustration in Figure 5-31 and then use the **FILLET**, **CHAMFER**, and **TRIM** commands to obtain the following figure. (Assume the missing dimensions.)

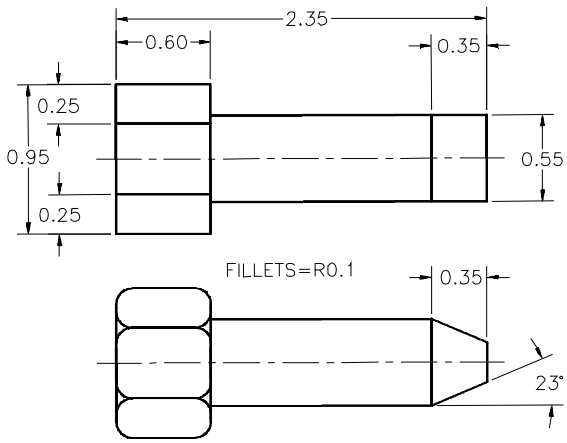

Figure 5-31 *Drawing for Exercise 6*

EXTENDING SKETCHED OBJECTS

Toolbar:	Modify > Extend
Menu:	Modify > Extend
Command:	EXTEND

The **EXTEND** command may be considered the opposite of the **TRIM** command. In the **TRIM** command you trim objects; in the **EXTEND** command you can extend lines, polylines, rays, and arcs to meet other objects. This command does not extend closed loops. The command format is similar to that of the **TRIM** command. You are required to select the boundary edges first. The boundary edges are those objects that the selected lines or arcs

© CADCIM Technologies, USA. For engineering services, contact sales@cadcim.com

extend to meet. These edges can be lines, polylines, circles, arcs, ellipses, xlines, rays, splines, text, blocks, or even viewports. The prompt sequence that will follow when you choose the **Extend** button is given next.

Current settings: Projection= UCS, Edge=None
Select boundary edges ...
Select objects or <select all>: *Select the boundary edges.*
Select objects: Enter
Select object to extend or shift-select to trim or [Fence/Crossing/Project/Edge/Undo]:

Select object to extend Option

Here you have to specify the object you want to extend to the selected boundary (Figure 5-32). This prompt is repeated until you press ENTER. Now you can select a number of objects in a single **EXTEND** command.

Shift-select to trim Option

This option is used to switch to the trim mode in the **EXTEND** command. You can press the SHIFT key and then select the object to be trimmed. In this case, the boundary edges will be taken as the cutting edges.

Project Option

In this option, you can use the projection mode while trimming objects. The prompt sequence that will follow when you choose the **Extend** button is given next.

Current settings: Projection= UCS Edge= None
Select boundary edges ...
Select objects or <select all>: *Select the boundary edges.*
Select objects: Enter
Select object to extend or shift-select to trim or [Fence/Crossing/Project/Edge/Undo]: **P** Enter
Enter a projection option [None/UCS/View] <current>:

The **None** option is used whenever the objects to be extended intersect with the boundary edge in 3D space. If you want to extend those objects that do not intersect the boundary edge in 3D space, use the **UCS** or **View** option. The **UCS** option projects the objects to the *XY* plane of the current UCS, while the **View** option projects the objects to the current view.

Edge Option

You can use this option whenever you want to extend objects that do not actually intersect the boundary edge, but would intersect its edge if the boundary edge were extended (Figure 5-33). If you enter **E** at the prompt, the selected object is extended to the implied boundary edge. If you enter **N** at the prompt, only those objects that would actually intersect the real boundary edge are extended (the default). The prompt sequence is given next.

© CADCIM Technologies, USA. For online training, contact sales@cadcim.com

Current settings: Projection= UCS Edge= None
Select boundary edges ...
Select objects or <select all>: *Select the boundary edge.*
Select objects: Enter
Select object to extend or shift-select to trim or [Fence/Crossing/Project/Edge/Undo]: **E** Enter
Enter an implied extension mode [Extend/No extend] <current>: **E** Enter
Select object to extend or shift-select to trim or [Project/Edge/Undo]: *Select the line to extend.*

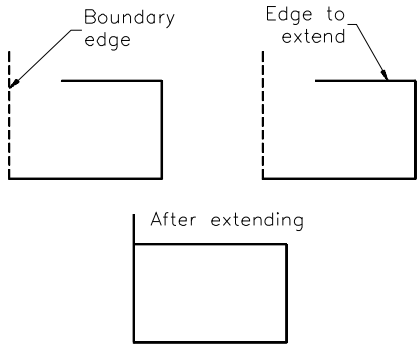

Figure 5-32 *Extending an edge*

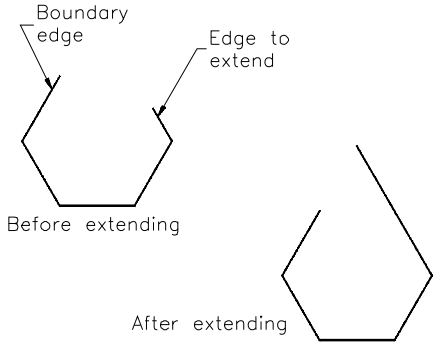

Figure 5-33 *Extending an edge using the* ***Edge*** *option (****Extend****)*

Note
Working of the ***Fence*** *and* ***Crossing*** *options in the* ***EXTEND*** *command is the same as that in* ***TRIM*** *command.*

Undo Option

If you want to remove the previous change created by the **EXTEND** command, enter **U** at the **Select object to extend or** [Fence/Crossing/Project/Edge/Undo]: prompt.

Trimming and Extending with Text, Region, or Spline

The **TRIM** and **EXTEND** commands can be used with text, regions, or splines as edges (Figure 5-34). This makes the **TRIM** and **EXTEND** commands two of the most useful editing commands in AutoCAD LT. The **TRIM** and **EXTEND** commands can also be used with arcs, elliptical arcs, splines, ellipses, 3D Pline, rays, and lines. See Figure 5-35.

The system variables **PROJMODE** and **EDGEMODE** determine how the **TRIM** and **EXTEND** commands are executed. The values that can be assigned to these variables are discussed next.

© CADCIM Technologies, USA. For engineering services, contact sales@cadcim.com

Value	PROJMODE	EDGEMODE
0	True 3D mode	Use regular edge without extension (default)
1	Project to current UCS *XY* plane (default)	Extend the edge to the natural boundary
2	Project to current view plane	

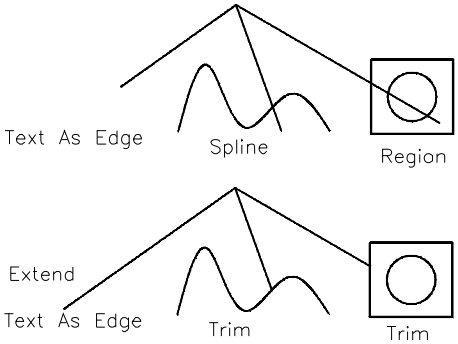

Figure 5-34 *Using the* ***TRIM*** *and* ***EXTEND*** *commands with text, spline, and region*

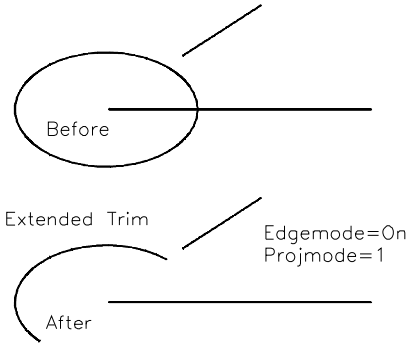

Figure 5-35 *Using the* ***Edge*** *option to do an implied trim*

STRETCHING SKETCHED OBJECTS

Toolbar:	Modify > Stretch
Menu:	Modify > Stretch
Command:	STRETCH

This command can be used to stretch objects, altering the selected portions of the objects. With this command you can lengthen objects, shorten them, and alter their shapes, see Figure 5-36. You must use a Crossing, or CPolygon selection to specify the objects to be stretched. The prompt sequence that will follow when you choose the **Stretch** button is given next.

Select objects to stretch by crossing-window or crossing-polygon ...
Select objects: *Select the objects using crossing window or polygon.*
Select objects: Enter

After selecting the objects, you have to specify the point of displacement. You should select only that portion of the object that needs stretching.

Specify base point or displacement <displacement>: *Specify the base point.*
Specify second point of displacement or <use first point as displacement>: *Specify the displacement point or press ENTER to use the first point as the displacement.*

© CADCIM Technologies, USA. For online training, contact sales@cadcim.com

You normally use a Crossing or CPolygon selection with **STRETCH** because if you use a Window, those objects that cross the window are not selected, and the objects selected because they are fully within the window are moved, not stretched. The object selection and stretch specification process of **STRETCH** is a little unusual. You are really specifying two things: first, you are selecting objects. Second, you are specifying the portions of those selected objects to be stretched. You can use a Crossing or CPolygon selection to simultaneously specify both, or you can select objects by any method, and then use any window or crossing specification to specify what parts of those objects to stretch. Objects or portions of selected objects completely within the window or crossing specification are moved. If selected objects cross the window or crossing specification, their defining points within the window or crossing specification are moved, their defining points outside the window or crossing specification remain fixed, and the parts crossing the window or crossing specification are stretched. Only the last window or crossing specification made determines what is stretched or moved. Figure 5-36 illustrates using a crossing selection to simultaneously select the two angled lines and specify that their right ends will be stretched. Alternatively, you can select the lines by any method and then use a Crossing selection (which will not actually select anything) to specify that their right ends will be stretched.

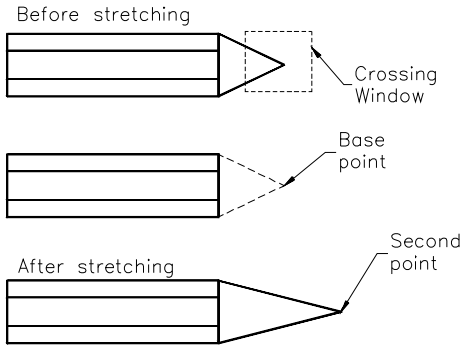

Figure 5-36 *Stretching the entities*

Note

The regions and solids cannot be stretched. When you select them, they will be moved instead of stretching.

LENGTHENING SKETCHED OBJECTS

Menu:	Modify > Lengthen
Command:	LENGTHEN

Like the **TRIM** and **EXTEND** commands, the **LENGTHEN** command can be used to extend or shorten lines, polylines, elliptical arcs, and arcs. The **LENGTHEN** command has several options that allow you to change the length of objects by dynamically dragging the object endpoint, entering the delta value, entering the percentage value, or entering the total length of the object. This command also allows the repeated selection of the objects for editing. This command has no effect on closed objects such as circles. The selected entity will be increased or decreased from the endpoint closest to the selection point. The prompt sequence that will follow when you invoke the **Lengthen** command is given next.

Select an object or [DElta/Percent/Total/DYnamic]:

© CADCIM Technologies, USA. For engineering services, contact sales@cadcim.com

Note

*By default, the **Lengthen** button is not added in the **Modify** toolbar. You can add the **Lengthen** button in the **Modify** toolbar by right-clicking on any toolbar to display the shortcut menu. Select **Customize** from the shortcut menu to display the **Customize User Interface** dialog box. The customization files are listed in **Customizations in All CUI files** area. Choose the **Plus** symbol against the **Toolbar** option to explode the tree. All available toolbars are listed under the **Toolbar** option. Expand the **Modify** list by choosing the **Plus** symbol against the **Modify** option. All the tools currently in the **Modify** toolbar are displayed under the **Modify** list. Now select the **Modify** option from the **Categories** drop-down menu available in the **Command List** area. Various tools that can be added or are currently available in the **Modify** toolbar are displayed in the **Command List** area. Drag the **Lengthen** button from the **Command list** area to the tools in the **Modify** option of the **Customizations in All CUI files** area. Choose the **Ok** button from the **Customize User Interface** dialog box. **Lengthen** tools is now available in the **Modify** toolbar.*

Select an object Option

This is the default option that returns the current length or the included angle of the selected object. If the object is a line, AutoCAD LT returns only the length. However, if the selected object is an arc, AutoCAD LT returns the length and the angle. The same prompt sequence will be displayed, after you select the object.

DElta Option

The **DElta** option is used to increase or decrease the length or angle of an object by defining the distance or angle by which the object will be extended. The delta value can be entered by entering a numerical value or by specifying two points. A positive value will increase (Extend) the length of the selected object and a negative value will decrease it (Trim), see Figure 5-37. The prompt sequence to use this option is given next.

Select an object or [DElta/Percent/Total/DYnamic]: **DE** Enter
Enter delta length or [Angle] <current>: *Specify the length or enter A for angle.*
Enter delta angle <current>: *Specify the delta angle.*
Select object to change or [Undo]: *Select object to be extended.*
Select object to change or [Undo]: Enter

Percent

The **Percent** option is used to extend or trim an object by defining the change as a percentage of the original length or the angle, Figure 5-37. The current length of the line is taken as 100 percent. If you enter a value more than 100, the length will increase by that amount. Similarly, if you enter a value less than 100, then the length will decrease by that amount. For example, a positive number of 150 will increase the length by 50 percent and a positive number of 75 will decrease the length by 25 percent of the original value (negative values are not allowed).

Total

The **Total** option is used to extend or trim an object by defining the new total length or angle.

© CADCIM Technologies, USA. For online training, contact sales@cadcim.com

For example, if you enter a total length of 1.25, AutoCAD LT will automatically increase or decrease the length of the object so that the new length is 1.25. The value can be entered by entering a numerical value or by specifying two points. The object is shortened or lengthened with respect to the endpoint that is closest to the selection point. The selection point is determined by where the object was selected. The prompt sequence for using this option is given next.

Specify total length or [Angle] <current>: *Specify the length or enter* **A** *for angle.*

If you enter a numeric value in the previous prompt, the length of the selected objects is changed accordingly, see Figure 5-38. You can change the angle of an arc by entering **A** and giving the new value.

DYnamic

The **DYnamic** option allows you to dynamically change the length or angle of an object by specifying one of the endpoints and dragging it to a new location. The other end of the object stays fixed and is not affected by dragging. The angle of lines, radius of arcs, and shape of elliptical arcs are unaffected.

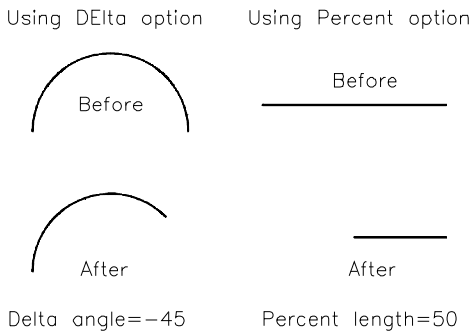

Figure 5-37 *Using the* ***DElta*** *and* ***Percent*** *options*

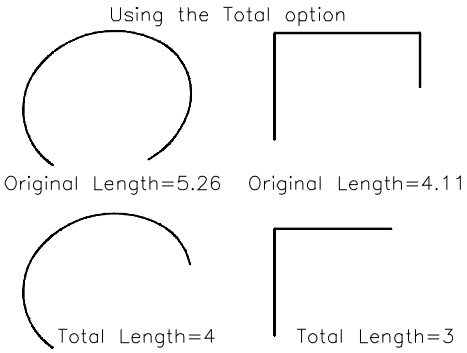

Figure 5-38 *Using the* ***Total*** *option*

ARRAYING SKETCHED OBJECTS

Toolbar:	Modify > Array
Menu:	Modify > Array
Command:	ARRAY

An array is defined as the method of creating multiple copies of the selected object and arranging them in a rectangular or circular fashion. In some drawings, you may need to specify an object multiple times in a rectangular or circular arrangement. For example, suppose you have to draw six chairs around a table. This job can be accomplished by drawing each chair separately or by using the **COPY** command to make multiple copies of the chair. But it is a very tedious process and also the alignment of the chairs will have to be adjusted. This can be easily done using the **ARRAY** command. All you have to do is to create just one chair and the remaining five will be created and automatically arranged around the table by the **ARRAY**

© CADCIM Technologies, USA. For engineering services, contact sales@cadcim.com

command. This method is more efficient and less time-consuming. This command allows you to make multiple copies of the selected objects in a rectangular or polar fashion. Each resulting element of the array can be controlled separately. When you choose the **Array** button, the **Array** dialog box is displayed. You can use this dialog box for creating a rectangular array or a polar array.

Rectangular Array

A rectangular array is formed by making copies of the selected object along the *X* and *Y* axes directions of an imaginary rectangle (along rows and columns). The rectangular array can be created by selecting the **Rectangular Array** radio button in the **Array** dialog box, see Figure 5-39.

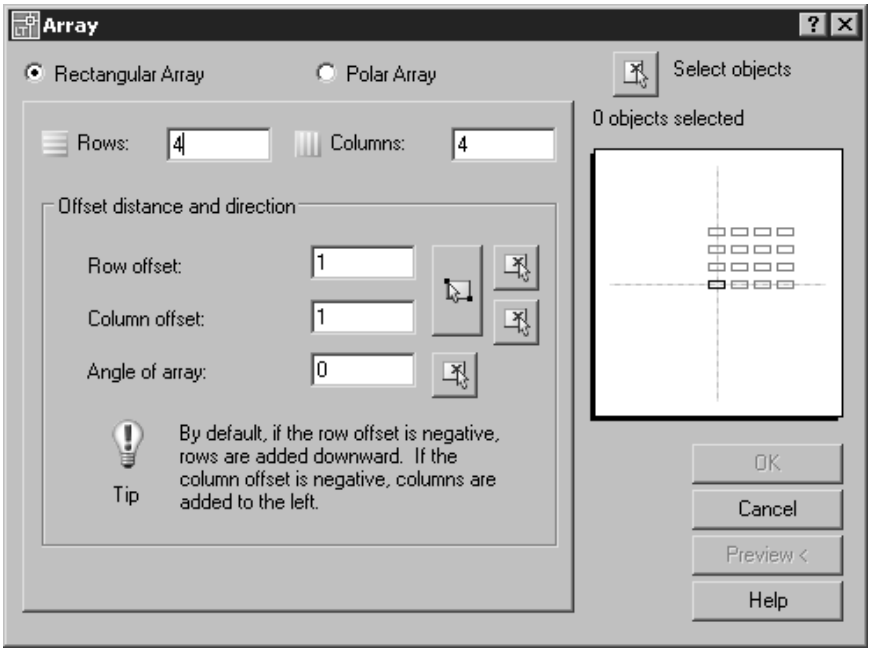

Figure 5-39 *The* ***Rectangular Array*** *options in the* ***Array*** *dialog box*

Rows

This edit box is used to specify the number of rows in the rectangular array, which are arranged along the *X* axis of the current UCS.

Columns

This edit box is used to specify the number of columns in the rectangular array, which are are arranged along the *Y* axis of the current UCS.

Offset distance and direction Area

The options under this area are used to define the distance between the rows and the columns and the angle of the array.

© CADCIM Technologies, USA. For online training, contact sales@cadcim.com

Row offset. This edit box is used to specify the distance between the rows, see Figure 5-40. You can either enter the distance value in this edit box or choose the **Pick Row Offset** button to define the distance. This button is provided on the right of the **Row offset** edit box. When you choose this button, the **Array** dialog box will be temporary closed and you will be prompted to specify two points on the screen to define the row offset distance. A positive value of the row offset will create the rows along the positive *X* axis direction. A negative value of the row offset will create the rows along the negative *X* axis direction, see Figure 5-41.

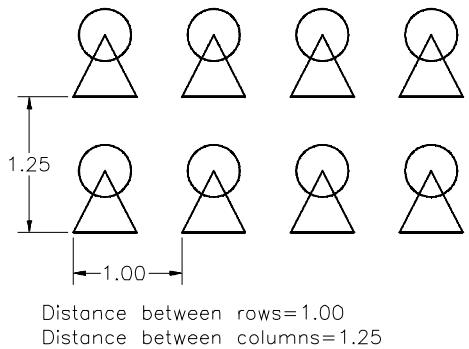

Figure 5-40 *A rectangular array with row and column distance*

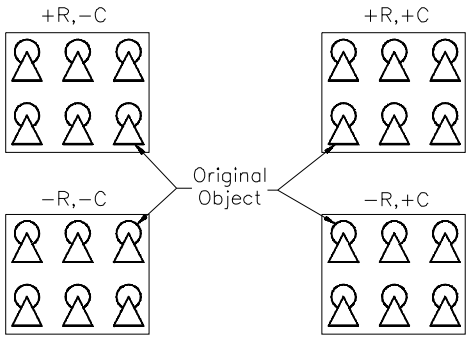

Figure 5-41 *Specifying the direction of arrays*

Column offset. This edit box is used to specify the distance between the columns, Figure 5-40. You can either enter the distance value in this edit box or choose the **Pick Column Offset** button to define it. This button is provided on the right of the **Column offset** edit box. When you choose this button, the **Array** dialog box will be temporarily closed and you will be prompted to specify two points on the screen to define the column offset distance. A positive value of the row offset will create the rows along the positive *Y* axis direction. A negative value of row offset will create the rows along the negative *Y* axis direction, see Figure 5-41.

You can define both the row offset distance and the column offset distance simultaneously by choosing the **Pick Both Offsets** button. When you choose this button, the **Array** dialog box will be temporarily closed and you will be prompted to define a unit cell by specifying two opposite corners. The distance along the *X* axis of the unit cell defines the distance between the rows and the distance along the *Y* axis of the unit cell defines the distance between the columns.

Angle of array. This edit box is used to define the angle of the array. This is the value by which the rows and the columns will be rotated, Figure 5-42. A positive value will rotate them in the counterclockwise direction and a negative value will rotate them in the clockwise direction. You can also define the angle by choosing the **Pick Angle of Array** button and specifying two points on the screen.

The object for an array can be selected by choosing the **Select Objects** button. You can preview the creation of an array by choosing the **Preview** button. When you choose this button, the **Array** dialog box will be displayed, Figure 5-43. If you are satisfied with the array, choose the **Accept** button, and the array will be created. If you are not satisfied with the array, choose the

© CADCIM Technologies, USA. For engineering services, contact sales@cadcim.com

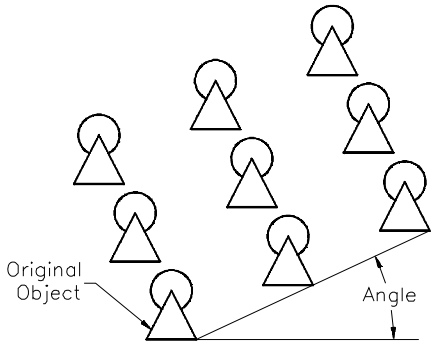

Figure 5-42 *Rotated rectangular array*

Figure 5-43 *The **Array** confirmation box for accepting or modifying the array*

Modify button. The **Array** dialog box will be redisplayed on the screen and you can make the necessary changes.

Polar Array

A polar array is an arrangement of the objects around a point in a circular fashion. This kind of array is created by selecting the **Polar Array** radio button in the **Array** dialog box, Figure 5-44.

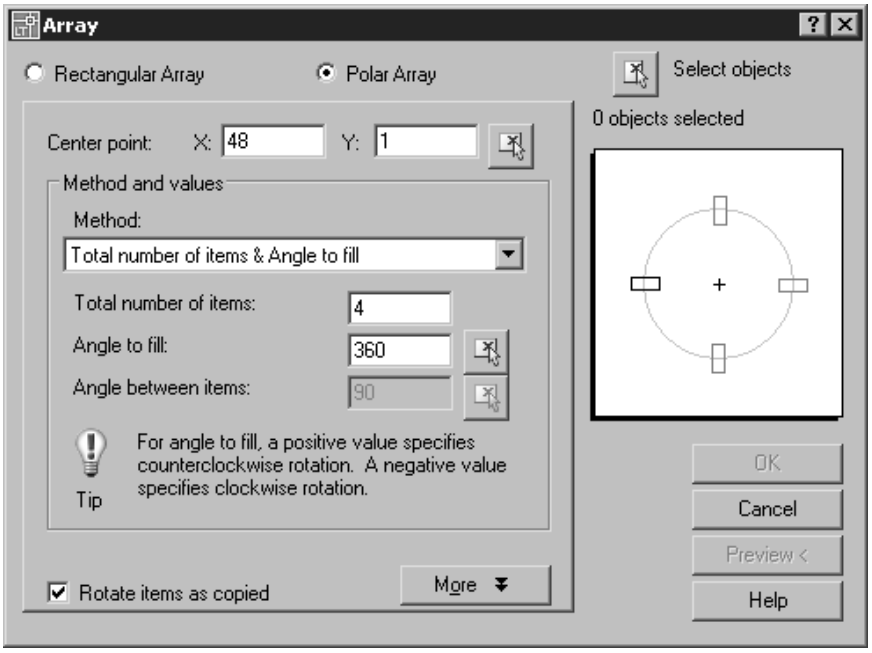

Figure 5-44 *The **Polar Array** options in the **Array** dialog box*

Center point

The center point of the array is defined as the point around which the selected items will be

© CADCIM Technologies, USA. For online training, contact sales@cadcim.com

arranged. It is considered as the center point of the imaginary circle on whose circumference the items will be placed. The coordinates of the center of the array can be specified in the **X** and **Y** edit boxes. You can either enter the values in these edit boxes or select the center point of the array from the screen. To select the center point of the array from the screen, choose the **Pick Center Point** button provided on the right side of the **Y** edit box. When you choose this button, the **Array** dialog box will be temporarily closed and you will be prompted to select the center of the array. The **Array** dialog box will be redisplayed when you select the center of the array. Figure 5-45 shows a polar array displaying the center of the imaginary circle about which the objects are rotated.

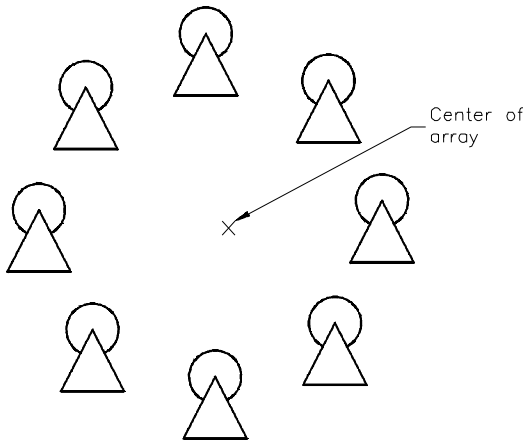

Figure 5-45 *Center point of an array*

Method and values Area

The options under this area are used to set the parameters related to the method that will be employed to create the polar array. The other options in this area will be available based on the method you select for creating the polar array.

Method. This drop-down list provides you with three methods for creating the polar array. These three methods are discussed next.

Total number of items & Angle to fill. This method is used to create a polar array by specifying the total number of items in the array and the total included angle between the first and the last item of the array, see Figure 5-46. The number of items and the angle to be filled can be specified in the **Total number of items** and **Angle to fill** edit boxes, respectively. You can also specify the angle to fill on

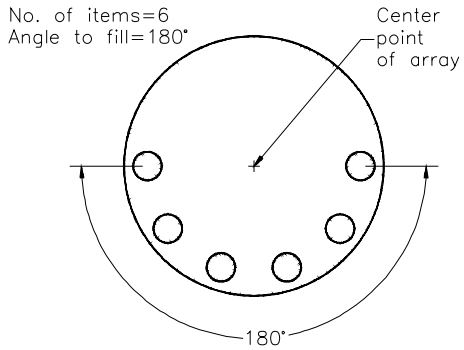

Figure 5-46 *Array created by sepecifying the number of items and angle of fill*

© CADCIM Technologies, USA. For engineering services, contact sales@cadcim.com

the screen. This is done by choosing the **Pick Angle to Fill** button provided on the right side of the **Angle to fill** edit box. The **Array** dialog box will be temporarily closed and you will be prompted to specify the angle to fill.

Total number of items & Angle between items. This method is used when you want to create a polar array by specifying the total number of items in the array and the included angle between two adjacent items, see Figure 5-47. The angle between the items is also called the incremental angle. The number of items and the angle between the items can be specified in the **Total number of items** and **Angle between items** edit boxes, respectively. You can also specify the angle between the items on the screen. This is done by choosing the **Pick Angle Between Items** button on the right side of the **Angle between items** edit box. The **Array** dialog box will be temporarily closed and you will be prompted to specify the angle between the items.

Angle to fill & Angle between items. This method is used when you want to specify the angle between the items and total angle to fill, Figure 5-48. In this case, the number of items is not specified, but is automatically calculated using the total angle to fill in the array and the angle between the items. The angle to fill and the angle between the items can be entered in the respective edit boxes or can be specified on the screen using the respective buttons.

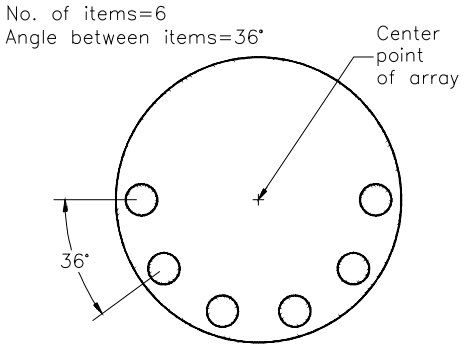

Figure 5-47 *Array created by specifying the number of items and the angle between items*

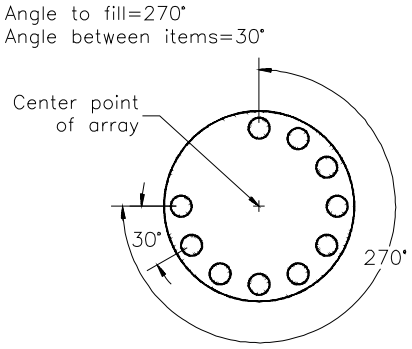

Figure 5-48 *Array created by specifying the angle to fill and the angle between items*

Rotate items as copied

This check box is selected to rotate the objects as they are copied around the center point. If this check box is cleared, the objects are not rotated as they are copied. This means that the replicated objects remain in the same orientation as the original object. You can have the items rotated around the center point as they are copied by selecting this check box. Here, the same face of each object points toward the pivot point. Figure 5-49 shows a polar array with items rotated as copied and Figure 5-50 shows a polar array with items not rotated as copied.

More

When this button is chosen, the **Array** dialog box expands providing the options of defining

© CADCIM Technologies, USA. For online training, contact sales@cadcim.com

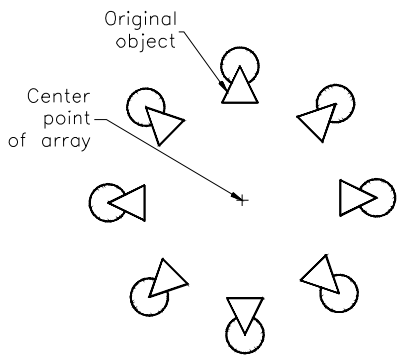

Figure 5-49 Items rotated as copied

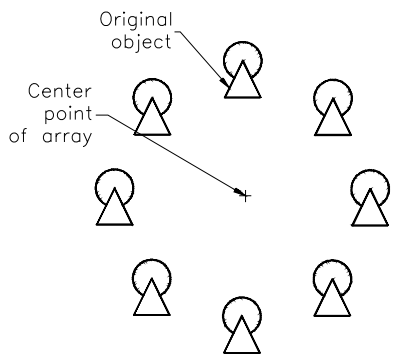

Figure 5-50 Items not rotated as copied

the base point of the objects, see Figure 5-51. The base point will maintain a constant distance from the center of the array when the items are copied in a polar fashion. You can use the object's default base points by selecting the **Set to object's default** check box. You can also specify the user-defined points by clearing this check box. Specify the *X* and *Y* coordinate values of the center of the array in the **X** and **Y** edit boxes in this area. You can also specify the base point on the screen by choosing the **Pick Base Point** button.

You can preview the array using the **Preview** button. The **Array** dialog box will be displayed and you can choose the **Accept** button if you are satisfied with the array or choose the **Modify** button to make any modifications.

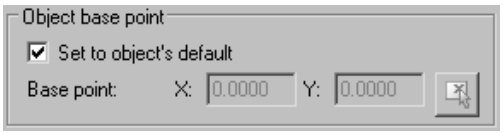

*Figure 5-51 More options of the **Array** dialog box*

Tip

*By default, in a polar array the objects are arrayed in the counterclockwise direction. But if you change the angle measuring direction from counterclockwise to clockwise using the **Units** dialog box then the objects will be arrayed in the clockwise direction and not in the counterclockwise direction.*

MIRRORING SKETCHED OBJECTS

Toolbar:	Modify > Mirror
Menu:	Modify > Mirror
Command:	MIRROR

The **MIRROR** command creates a mirror copy of the selected objects. The objects can be mirrored at any angle. This command is helpful in drawing symmetrical figures. When you invoke this command, AutoCAD LT will prompt you to select the objects and then the mirror line.

After you select the objects to be mirrored, AutoCAD LT prompts you to enter the first point of the mirror line and the second point of the mirror line. A mirror line is an imaginary line about which objects are reflected. You can specify the endpoints of the mirror line by specifying the points on the screen or by entering their coordinates. The mirror line can be specified at any

© CADCIM Technologies, USA. For engineering services, contact sales@cadcim.com

angle. After the first point on the mirror line has been selected, AutoCAD LT displays the selected objects as they would appear after mirroring. Next, you need to specify the second endpoint of the mirror line. Once this is accomplished, AutoCAD LT prompts you to specify whether you want to retain the original figure (Figure 5-52) or delete it and just keep the mirror image of the figure (Figure 5-53). The prompt sequence when you choose this button is given next.

Select objects: *Select the objects to be mirrored.*
Select objects: Enter
Specify first point of mirror line: *Specify the first endpoint.*
Specify second point of mirror line: *Specify the second endpoint.*
Delete source objects ? [Yes/No] <N>: *Enter* Y *for deletion*, N *for retaining the previous objects.*

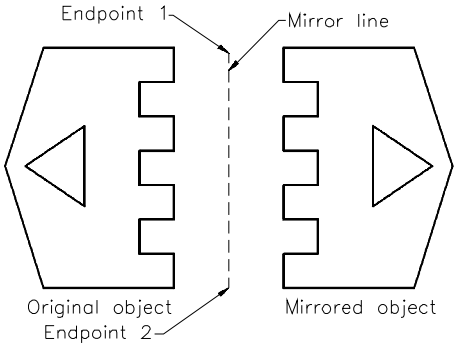

Figure 5-52 *Creating a mirror image of an object using the* ***MIRROR*** *command*

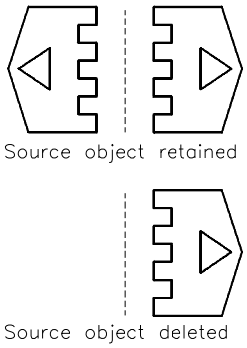

Figure 5-53 *Retaining and deleting old objects after mirroring*

To mirror the objects at some angle, define the mirror line accordingly. For example, to mirror an object such that the mirrored object is placed at an angle of 90-degree from the original object, define the mirror line at an angle of 45-degree, see Figure 5-54.

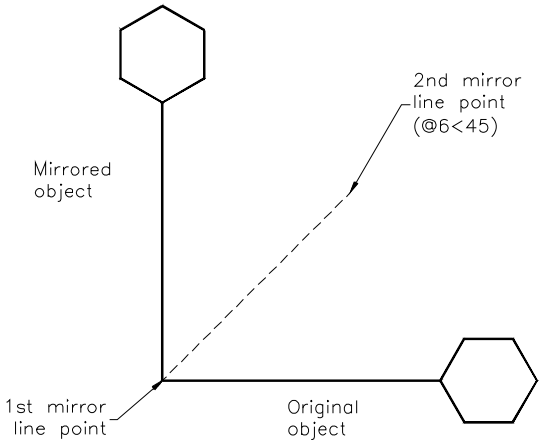

Figure 5-54 *Mirroring the object at an angle*

© CADCIM Technologies, USA. For online training, contact sales@cadcim.com

Text Mirroring

By default, the **MIRROR** command reverses all the objects, except texts. But, if you want the text to be mirrored, (written backward), you need to set modify the value of the **MIRRTEXT** system variable. This variable has the following two values (Figure 5-55).

1 = Text is reversed in relation to the original object.
0 = Restricts the text from being reversed with respect to the original object. This is the default value.

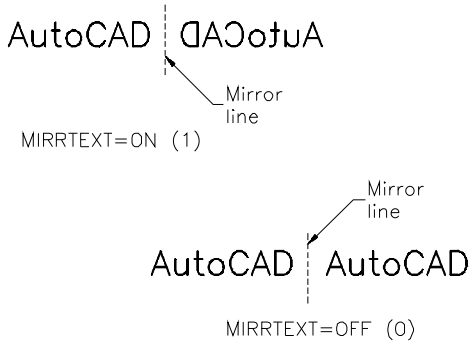

Figure 5-55 *Using the* ***MIRRTEXT*** *variable for mirroring the text*

Therefore, if you want the existing object to be mirrored, but at the same time you want the text to be readable and not reversed, set the value of the **MIRRTEXT** variable to **0**, and then mirror the objects.

BREAKING SKETCHED OBJECTS

Toolbar:	Modify > Break at Point, Break
Menu:	Modify > Break
Command:	BREAK

The **BREAK** command breaks an existing object into two or erases portions of the objects. This command can be used to remove a part of the selected objects or to break objects such as lines, arcs, circles, ellipses, xlines, rays, splines, and polylines. You can break the objects using the following methods.

1 Point Option

This method of breaking the existing entities can be directly invoked by choosing the **Break at Point** button from the **Modify** toolbar. Using this method, you can break the object into two parts. When you choose this button, you will be prompted to select the object to be broken. Once you select the object to be broken, you will be prompted to specify the first break point. You will not be prompted to specify the second break point and the object will be automatically broken at the first point. The prompt sequence that will follow when you choose this button is given next.

Select object: *Select the object to be broken.*
Specify second break point or [First point]: **F** Enter
Specify first break point: *Specify the point at which the object should be broken.*
Specify second break point: @

© CADCIM Technologies, USA. For engineering services, contact sales@cadcim.com

2 Points Option

This method allows you to break an object between two selected points. The portion of the object between the two selected point is removed. The point at which you select the object becomes the first break point and then you are prompted to enter the second break point. The prompt sequence that will follow when you choose this button is given next.

Select object: *Select the object to be broken.*
Specify second break point or [First point]: *Specify the second break point on the object.*

The object is broken between these two points and the in-between portion of the object is removed, see Figure 5-56.

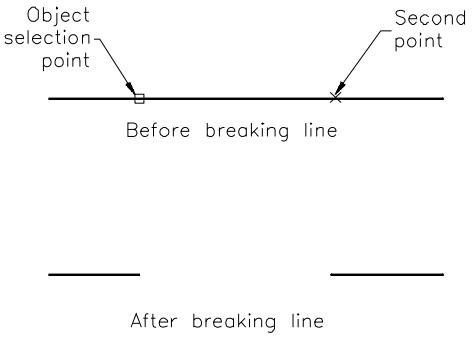

Figure 5-56 *Using the* ***2 Point*** *option for breaking the line*

2 Points Select Option

This method is similar to the 2 Points option; the only difference is that instead of making the selection point as the first break point, you are allowed to specify a new first point, see Figure 5-57. The prompt sequence that will follow when you choose the **Break** button is given next.

Select object: *Select the object to be broken.*
Enter second break point or [First point]: **F** Enter
Specify first break point: *Specify a new break point.*
Specify second break point: *Specify second break point on the object.*

If you need to work on arcs or circles, make sure that you work in a counterclockwise direction, or you may end up cutting the wrong part. In this case, the second point should be selected in a counterclockwise direction with respect to the first one (Figure 5-58).

You can use the **2 Points** and **2 Points Select** method to break an object into two without removing a portion in between. This can be achieved by specifying the same point on the object as the first and the second break points. If you specify the first break point on the line and the second break point beyond the end of the line, one complete end starting from the first break point will be removed. The extrusion direction of the selected object need not be parallel to the *Z* axis of the UCS.

Exercise 7 *General*

Break a line at five different places and then erase the alternate segments. Next, draw a circle and break it into four equal parts.

© CADCIM Technologies, USA. For online training, contact sales@cadcim.com

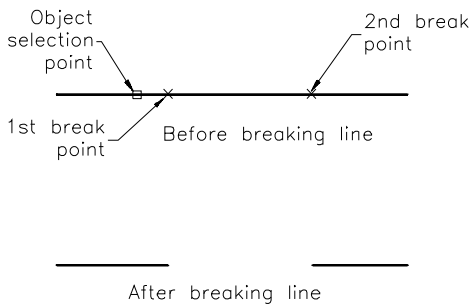

Figure 5-57 Respecifying the first break point for breaking the lines

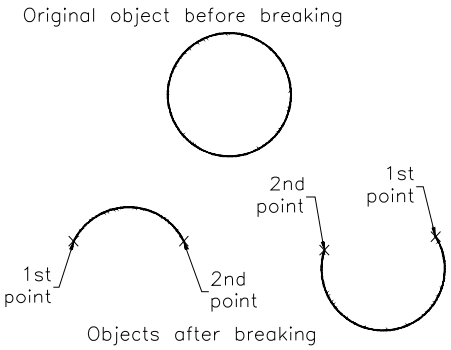

Figure 5-58 Breaking a circle

MEASURING SKETCHED OBJECTS

Menu:	Draw > Point > Measure
Command:	MEASURE

While drawing, you may need to segment an object at fixed distances without actually dividing it. You can use the **MEASURE** command (Figure 5-59) to accomplish this. This command places points or blocks (nodes) on the given object at a specified distance. The shape of these points is determined by the **PDMODE** system variable and the size is determined by the **PDSIZE** variable. The **MEASURE** command starts measuring the object from the endpoint closest to where the object is selected. When a circle is to be measured, an angle from the center is formed that is equal to the Snap rotation angle. This angle becomes the starting point of measurement, and the markers are placed at equal intervals in a counterclockwise direction.

This command goes on placing markers at equal intervals of the specified distance without considering whether the last segment is the same distance or not. Instead of entering a value, you can also select two points that will be taken as the distance. In Figure 5-60, a line and a circle is measured. The Snap rotation angle is 0-degree. The **PDMODE** variable is set to 3 so that X marks are placed as markers. The prompt sequence that will follow when you invoke this option from the **Draw** menu is given next.

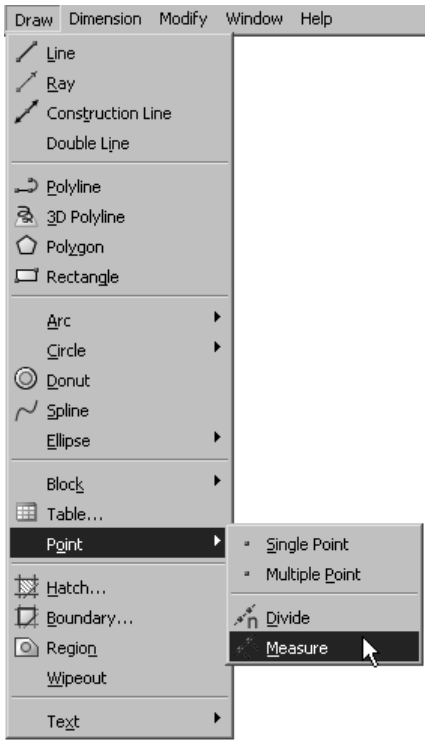

*Figure 5-59 Invoking the **MEASURE** command from the **Draw** menu*

© CADCIM Technologies, USA. For engineering services, contact sales@cadcim.com

Select object to measure: *Select the object to be measured.*
Specify length of segment or [Block]: *Specify the length for measuring the object.*

You can also place blocks as markers (Figure 5-61), but the block must already be defined within the drawing. You can align these blocks with the object to be measured. The prompt sequence is given next.

Select object to measure: *Select the object to be measured.*
Specify length of segment or [Block]: **B** Enter
Enter name of block to insert: *Enter the name of the block.*
Align block with object? [Yes/No] <Y>: *Enter* Y *to align,* N *to not align.*
Specify length of segment: *Enter the measuring distance.*

Note
You will learn more about creating and inserting blocks in Chapter 14 (Working with Blocks).

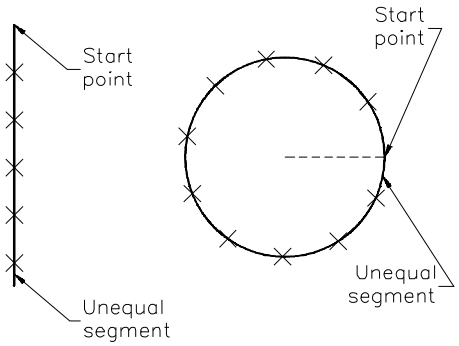

Figure 5-60 *Using the* ***MEASURE*** *command*

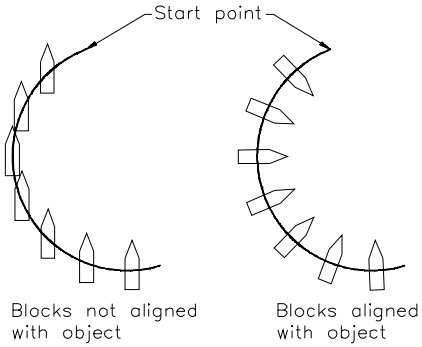

Figure 5-61 *Using blocks with the* ***MEASURE*** *command*

DIVIDING SKETCHED OBJECTS

Menu:	Draw > Point > Divide
Command:	DIVIDE

The **DIVIDE** command is used to divide an object into a specified number of equal length segments without actually breaking it. This command is similar to the **MEASURE** command except that here you do not have to specify the distance. The **DIVIDE** command calculates the full length of the object and places markers at equal intervals. This makes the last interval equal to the rest of the intervals. If you want a line to be divided, invoke this command and select the object to be divided. After this, you enter the number of divisions or segments. The number of divisions entered can range from 2 to 32,767. The prompt sequence that will follow when you invoke this command is given next.

© CADCIM Technologies, USA. For online training, contact sales@cadcim.com

Select object to divide: *Select the object you want to divide.*
Enter number of segments or [Block]: *Specify the number of segments.*

You can also place blocks as markers, but the block must be defined within the drawing. You can align these blocks with the object to be measured. The prompt sequence is given next.

Select object to divide: *Select the object to be measured.*
Enter number of segments or [Block]: **B** Enter
Enter name of block to insert: *Enter the name of the block.*
Align block with object? [Yes/No] <Y>: *Enter Y to align, N to not align.*
Enter number of segments: *Enter the number of segments.*

Figure 5-62 shows a line and a circle divided using this command and Figure 5-63 shows the use of blocks for dividing the selected segment.

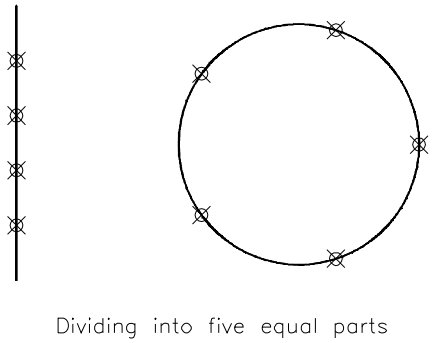

Figure 5-62 *Using the* ***DIVIDE*** *command*

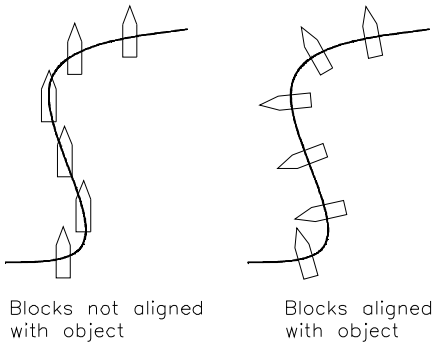

Figure 5-63 *Using blocks with the* ***DIVIDE*** *command*

Note
The size and shape of the points placed by the ***DIVIDE*** *and* ***MEASURE*** *commands are controlled by the* ***PDSIZE*** *and* ***PDMODE*** *system variables.*

JOINING THE SKETCHED OBJECTS*

Menu:	Modify >Join
Command:	JOIN

The **JOIN** command is used to join two or more collinear lines or arcs lying on the same imaginary circle. The lines or arcs can have gap between them. This command can also be used to join two or more polylines or splines, but they should be on the same plane and should not have any gap between them. As you invoke this command, you will be prompted to select the source object. The source object is one with which the other objects will be joined. The prompt sequence depends on the type of source object selected. The following prompt sequence is displayed when you invoke this command:

Select source object: *Select a sketched entity (line, polyline, arc, elliptical arc or spline)*

© CADCIM Technologies, USA. For engineering services, contact sales@cadcim.com

Joining Collinear Lines

If you have selected line as the source object, you will be prompted to select lines to join to source. Remember that the lines will be joined only if they are collinear. If there is any gap between the endpoints of the lines, it will be filled. The prompt sequence for joining two lines with a source line is given next.

Select lines to join to source: *Select first line to join to the source*
Select lines to join to source: *Select second line to join to the source*
Select lines to join to source: Enter
2 lines joined to source

Joining Arcs

Arcs can be joined using the **JOIN** command only if they lie on the same imaginary circle on which the source arc lie. The prompt sequence that follows when you select an arc as the source object is given next.

Select arcs to join to source or [cLose]: *Select first arc to join to the source*
Select arcs to join to source or: *Select second arc to join to the source or* Enter

Enter **L** at the **Select arcs to join to source or [cLose]** prompt to close the arc and convert it into a circle.

Joining Elliptical Arcs

Elliptical arcs can be joined using the **JOIN** command only if they lie on the same imaginary ellipse on which the source elliptical arc lie. The prompt sequence that follows when you select an elliptical arc as the source object is given next.

Select elliptical arcs to join to source or [cLose]: *Select first elliptical arc to join to the source*
Select elliptical arcs to join to source or: *Select second arc to join to the source or* Enter

Enter **L** at the **Select arcs to join to source or [cLose]** prompt to close the arc and convert it into an ellipse.

Joining Splines

Select a spline as the source object. You are now prompted to select splines to join to the source. The splines will be joined only if they are coplanar and are connected at their ends. The prompt sequence that follows when you when you select **Spline** as the source object is given next.

Select splines to join to source: *Select first spline to join to the source*
Select splines to join to source: *Select second spline to join to the source or* Enter

© CADCIM Technologies, USA. For online training, contact sales@cadcim.com

Joining Polylines

Only the end-connected polyline can be joined using this command. The prompt sequence when you select a polyline as the source object is given next.

Select objects to join to source: *Select a polyline/arc/line to join to the source*
Select objects to join to source: *Select a polyline/arc/line to join to the source or* Enter

Self-Evaluation Test

Answer the following questions and then compare your answers to those given at the end of this chapter.

1. When you shift a group of objects using the **MOVE** command, then the size and orientation of these objects are changed. (T/F)

2. The **COPY** command makes copies of the selected object, leaving the original object intact. (T/F)

3. A fillet cannot be created between two parallel and nonintersecting lines. (T/F)

4. With the **BREAK** command, when you select an object, the selection point becomes the first break point. (T/F)

5. Depending on the side to be offset, you can create smaller or larger circles, ellipses, and arcs with the _____ command.

6. The _____ command prunes the objects that extend beyond a required point of intersection.

7. The offset distance is stored in the _____ system variable.

8. Instead of specifying the scale factor, you can use the _____ option to scale an object with the reference of another object.

9. If the _____ system variable is set to a value of 1, the mirrored text is not reversed with respect to the original object. (T/F)

10. There are two types of arrays: _____ and _____.

© CADCIM Technologies, USA. For engineering services, contact sales@cadcim.com

Review Questions

Answer the following questions.

1. In the case of the **Through** option of the **OFFSET** command, you do not have to specify a distance; you simply have to specify an offset point. (T/F)

2. With the **BREAK** command, you cannot break an object in two without removing a portion in between. (T/F)

3. With the **FILLET** command, the extrusion direction of the selected object must be parallel to the *Z* axis of the UCS. (T/F)

4. A rectangular array can be rotated. (T/F)

5. Which object selection allows you to create a polygon that selects all the objects that it touches or that lie inside it?

   (a) Last (b) WPolygon
   (c) CPolygon (d) Fence

6. Which command is used to copy an existing object using a base point to another drawing?

   (a) **COPY** (b) **COPYBASE**
   (c) **MOVE** (d) **None**

7. Which command is used to change the size of an existing object with respect to an existing entity?

   (a) **ROTATE** (b) **SCALE**
   (c) **MOVE** (d) **None**

8. Which option of the **LENGTHEN** command modifies the length of the selected entity such that irrespective of the original length, the entity acquires the specified length?

   (a) **DElta** (b) **DYnamic**
   (c) **Percent** (d) **Total**

9. Which selection option is used to select the most recently drawn entity?

   (a) **Last** (b) **Previous**
   (c) **Add** (d) **None**

10. If an entire selected object is within a window or crossing specification, the _____ command works like the **MOVE** command.

© CADCIM Technologies, USA. For online training, contact sales@cadcim.com

11. The _____ option of the **EXTEND** command is used to extend objects to the implied boundary.

12. With the **FILLET** command, using the **Polyline** option, if the selected polyline is not closed, the _____ corner is not filleted.

13. When the chamfer distance is zero, the chamfer created is in the form of a _____.

14. AutoCAD LT saves the previous selection set and lets you select it again by using the _____ selection option.

15. The _____ selection option is used to select objects by creating a section line touching the objects to be selected.

Exercises

Exercise 8 — *General*

Draw the object shown in Figure 5-64. Use the **DIVIDE** command to divide the circle and use the **NODE** object snap to select the points. Assume the dimensions of the drawing.

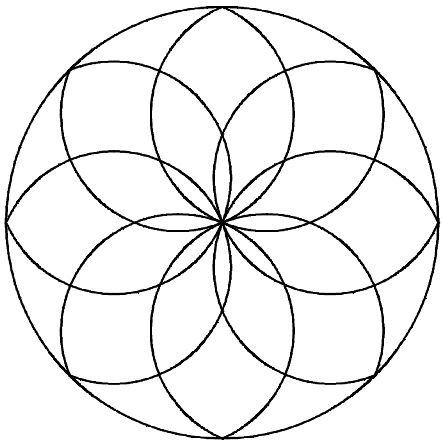

Figure 5-64 *Drawing for Exercise 8*

Exercise 9 — *Mechanical*

Draw the object shown in Figure 5-65 and save the drawing. Assume the missing dimensions.

© CADCIM Technologies, USA. For engineering services, contact sales@cadcim.com

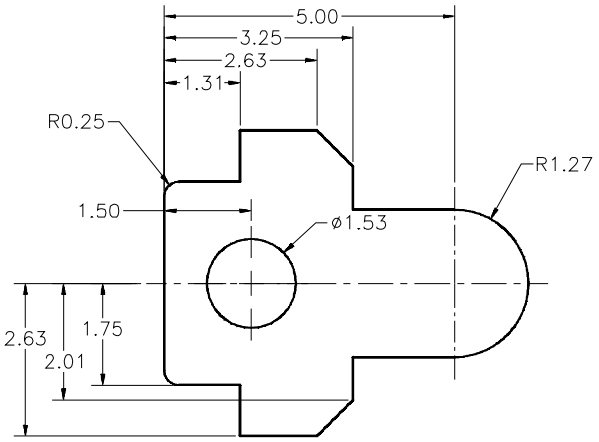

Figure 5-65 *Drawing for Exercise 9*

Exercise 10

Mechanical

Draw the drawing shown in Figure 5-66 and save the drawing.

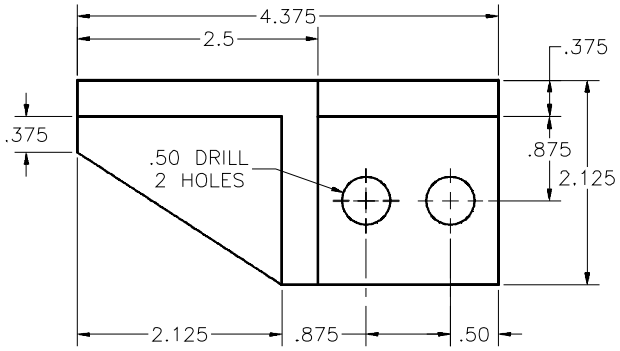

Figure 5-66 *Drawing for Exercise 10*

© CADCIM Technologies, USA. For online training, contact sales@cadcim.com

Exercise 11 *Mechanical*

Draw the object shown in Figure 5-67 and save the drawing.

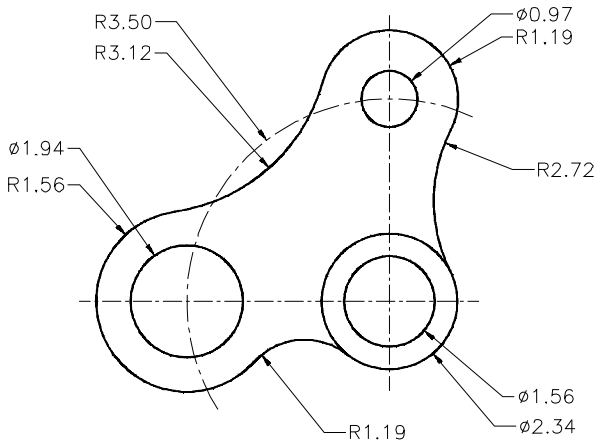

Figure 5-67 *Drawing for Exercise 11*

Exercise 12 *Mechanical*

Draw the object shown in Figure 5-68 and save the drawing. Assume the missing dimensions.

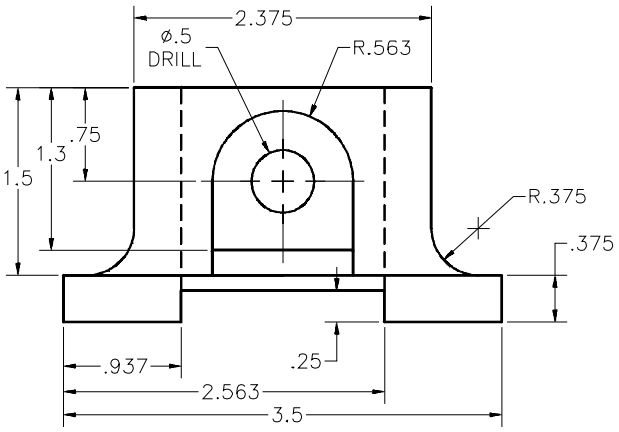

Figure 5-68 *Drawing for Exercise 12*

© CADCIM Technologies, USA. For engineering services, contact sales@cadcim.com

Problem Solving Exercise 1 *Mechanical*

Draw the object shown in Figure 5-69 and save the drawing. Assume the missing dimensions.

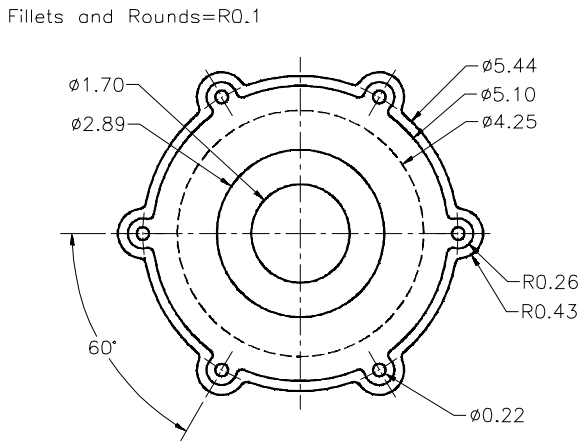

Figure 5-69 *Drawing for Problem Solving Exercise 1*

Problem Solving Exercise 2 *Mechanical*

Draw the object shown in Figure 5-70 and save the drawing. Assume the missing dimensions.

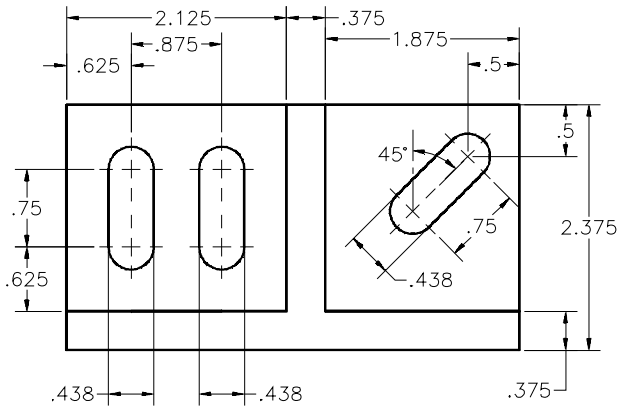

Figure 5-70 *Drawing for Problem Solving Exercise 2*

© CADCIM Technologies, USA. For online training, contact sales@cadcim.com

Problem Solving Exercise 3 *Architectural*

Draw the dining table with chairs shown in Figure 5-71 and save the drawing. Assume the missing dimensions.

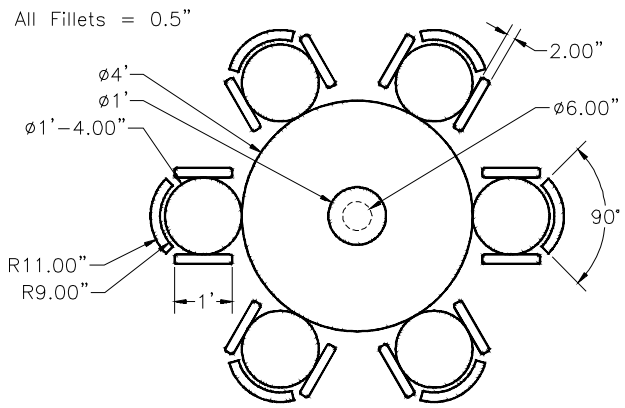

Figure 5-71 *Drawing for Problem Solving Exercise 3*

Problem Solving Exercise 4 *Architectural*

Draw the reception table with chairs shown in Figure 5-72 and save the drawing. The dimensions of the chairs are the same as those in Problem Solving Exercise 3.

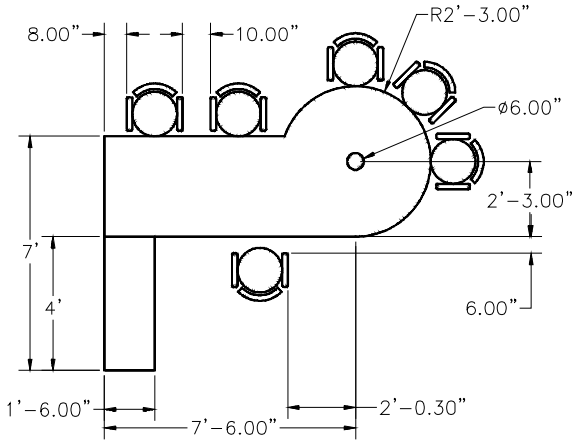

Figure 5-72 *Drawing for Problem Solving Exercise 4*

© CADCIM Technologies, USA. For engineering services, contact sales@cadcim.com

Problem Solving Exercise 5

Architectural

Draw the center table with chairs shown in Figure 5-73 and save the drawing. The dimensions of the chairs are the same as those in Problem Solving Exercise 3.

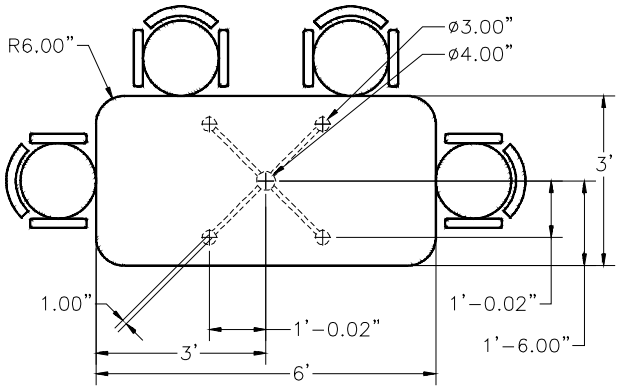

Figure 5-73 *Drawing for Problem Solving Exercise 5*

Problem Solving Exercise 6

Architectural

Draw the object shown in Figure 5-74 and save the drawing. Refer to the note mentioned in the drawing to create the arc of radius 30.

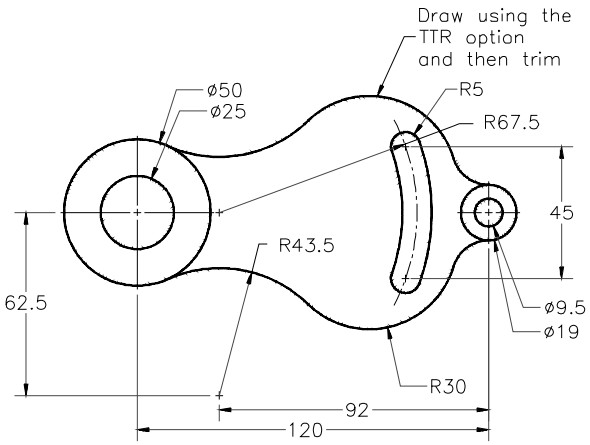

Figure 5-74 *Drawing for Problem Solving Exercise 6*

© CADCIM Technologies, USA. For online training, contact sales@cadcim.com

Problem Solving Exercise 7

Mechanical

Draw the object shown in Figure 5-75 and save the drawing.

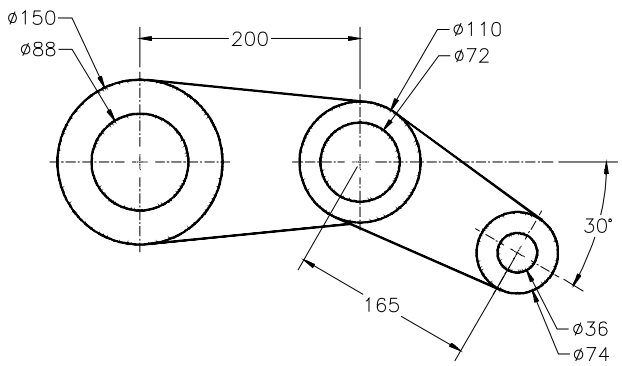

Figure 5-75 *Drawing for Problem Solving Exercise 7*

Problem Solving Exercise 8

Mechanical

Draw the object shown in Figure 5-76 and save the drawing.

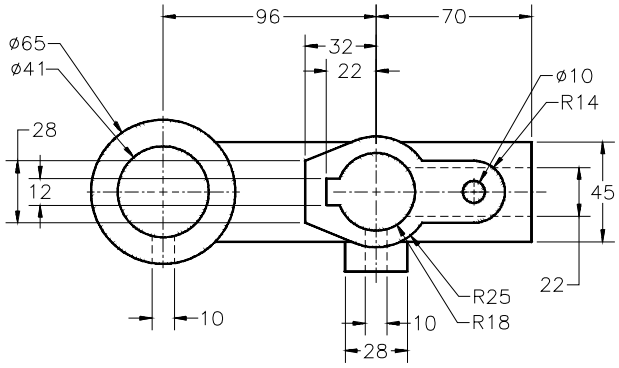

Figure 5-76 *Drawing for Problem Solving Exercise 8*

© CADCIM Technologies, USA. For engineering services, contact sales@cadcim.com

Answers to Self-Evaluation Test

1 - F, **2** - T, **3** - F, **4** - T, **5** - **OFFSET**, **6** - **TRIM**, **7** - **OFFSETDIST**, **8** - **Reference**, **9** - **MIRRTEXT**, **10** - **Rectangular**, **Polar**

© CADCIM Technologies, USA. For online training, contact sales@cadcim.com