Chapter 14

Working with Blocks

Learning Objectives

After completing this chapter, you will be able to:

- *Create blocks using the **Block Definition** dialog box.*
- *Insert blocks using the **Insert** dialog box.*
- *Create drawing files using the **Write Block** dialog box.*
- *Use the **DESIGNCENTER** to locate, preview, copy, or insert blocks and existing drawings.*
- *Use the **TOOL PALETTES** window to insert blocks.*
- *Split a block into individual objects using the **EXPLODE** and **XPLODE** commands.*
- *Rename blocks and delete unused blocks.*

THE CONCEPT OF BLOCKS

The ability to store parts of a drawing, or the entire drawing, so that they need not be redrawn when required in the same drawing or another drawing is a great benefit to the user. These parts of a drawing, entire drawings, or symbols (also known as **blocks**) can be placed (inserted) in a drawing at the location of your choice, in the desired orientation, and with the desired scale factor. The block is given a name (block name) and is referenced (inserted) by its name. All the objects within a block are treated as a single object. You can **MOVE**, **ERASE**, or **LIST** the block as a single object, that is, you can select the entire block simply by selecting anywhere on it. As for the edit and inquiry commands, the internal structure of a block is immaterial, since a block is treated as a primitive object, like a polygon. If a block definition is changed, all references to the block in the drawing are updated to incorporate the changes made to it.

A block can be created using the **BLOCK** command. You can also save objects in a drawing, or an entire drawing as a drawing file using the **WBLOCK** command. The main difference between the two is that a wblock can be inserted in any other drawing, but a block can be inserted only in the drawing file in which it was created.

Another feature of AutoCAD LT is that instead of inserting a symbol as a block (which results in adding the content of the referenced drawing to the drawing in which it is inserted), you can reference the other drawings (Xref) in the current file. This means that the contents of the referenced drawing are not added to the current drawing file, although they become part of that drawing on the screen. This is explained in detail in Chapter 16.

Advantages of Using Blocks

Blocks offer many advantages. Here are some of them.

1. Drawings often have some repetitive features. Instead of drawing the same feature again and again, you can create a block of this feature and insert it wherever required. This helps you to reduce drawing time and better organize your work.
2. Another advantage of using blocks is that they can be drawn and stored for future use. You can thus create a custom library of objects required for different applications. For example, if your drawings are concerned with gears, you could create blocks of gears and then integrate them with custom menus (see Chapter 32, for writing menus). In this manner, you could create an application environment of your own in AutoCAD LT.
3. The size of a drawing file increases as you add objects to it. AutoCAD LT keeps track of information about the size and position of each object in the drawing; for example, the points, scale factors, radii, and so on. If you combine several objects into a single object by forming a block with the **BLOCK** command, there will be a single scale factor, rotation angle, position, and so on, for all objects in the block, thereby saving storage space. Each object repeated in multiple block insertions needs to be defined only once in the block definition. Ten insertions of a gear, made of forty-three lines and forty-one arcs, require only ninety-four objects (10+43+41), while ten individually drawn gears require 840 objects [10 X (43+41)].
4. If the specification for an object changes, the drawing needs to be modified. This is a very tedious task if you need to detect each location where the change is to be made and edit it

individually. But if this object has been defined as a block, you can redefine it, and everywhere the object appears, it is revised automatically. This has been dealt with in Chapter 15, Defining Block Attributes.

5. Attributes (textual information) can be included in blocks. Different attribute values can be specified in each insertion of a block.
6. You can create symbols and then store them as blocks with the **BLOCK** command. Later on, with the **INSERT** command, you can insert the blocks in the drawing, in which they were defined. There is no limit to the number of times you can insert a block in a drawing.
7. You can store symbols as drawing files using the **WBLOCK** command and later insert these symbols into any other drawing using the **INSERT** command.
8. Blocks can have varying X, Y, and Z scale factors and rotation angles from one insertion to another (Figure 14-1).
9. You can insert multiple copies of a block about a specified path using the **DIVIDE** or the **MEASURE** command.

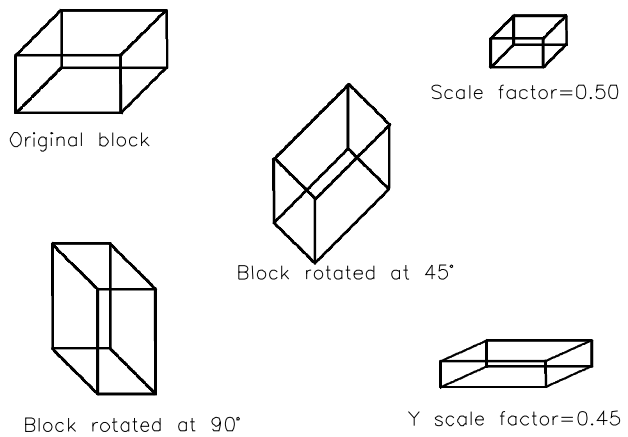

Figure 14-1 *Block with different specifications*

FORMATION OF BLOCKS

Drawing Objects for Blocks

The first step in creating blocks is to draw the object(s) to be converted into a block. You can consider any symbol, shape, or view that may be used more than once for conversion into a block (Figure 14-2). Even a drawing that is to be used more than once can be inserted as a block.

Tip

Examine the sketch of the drawing you are about to begin and examine it carefully to look for any shapes, symbols, and components that are to be used more than once. They can then be drawn once and be stored as blocks.

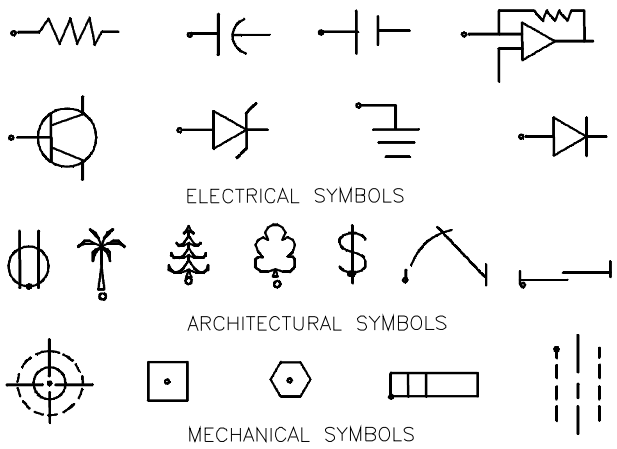

Figure 14-2 *Some common drafting symbols created to be stored in a library*

Checking Layers

You should be particularly careful about the layers on which the objects to be converted into a block are drawn. The objects must be drawn on layer 0 if you want the block to inherit the linetype and color of the layer on which it is inserted. If you want the block to retain the linetype and color of the layer on which it was drawn, draw the objects defining the block on that layer. For example, if you want the block to have the linetype and color of layer OBJ, draw the objects comprising the block on layer OBJ. Now, even if you insert the block on any other layer, the linetype and color of the block will be those of layer OBJ.

If the objects in a block are drawn with the color, linetype, and lineweight as ByBlock, this block when inserted assumes the properties of the current layer. To set the color to ByBlock, select **ByBlock** from the **Color Control** drop-down list of the **Properties** toolbar. You can also choose **Color** from the **Format** menu to display the **Select Color** dialog box and then choose the **ByBlock** button in the dialog box. Choose **OK** to close the dialog box. To set the linetype to ByBlock, select **ByBlock** from the **Linetype Control** drop-down list of the **Properties** toolbar. You can also select **ByBlock** in the **Linetype Manager** dialog box that is displayed when you choose **Linetype** from the **Format** menu and then choose the **Current** button. The current linetype is now set to **ByBlock**. Similarly, you can specify the lineweight as **ByBlock**.

Note

As discussed previously, before you create a block you should check the layers on which the objects are drawn because these layers will determine the color and linetype of the block when inserted. To change the layer associated with an object, use the ***Properties*** *toolbar,* ***PROPERTIES*** *palette,* ***Properties*** *option of the* ***CHANGE*** *command, or the* ***CHPROP*** *command.*

CONVERTING OBJECTS INTO A BLOCK

You can convert objects into a block either using the **Block Definition** dialog box or by using the command line. Both these options are discussed next.

Converting Objects Into Blocks Using the Block Definition Dialog Box

Toolbar:	Draw > Make Block
Menu:	Draw > Block > Make
Command:	BLOCK

When you invoke the **BLOCK** command (Figure 14-3), the **Block Definition** dialog box (Figure 14-4) is displayed. You can use the **Block Definition** dialog box to save any object or objects as a block.

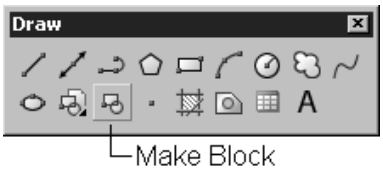

Figure 14-3 *The* ***Make Block*** *button in the* ***Draw*** *toolbar*

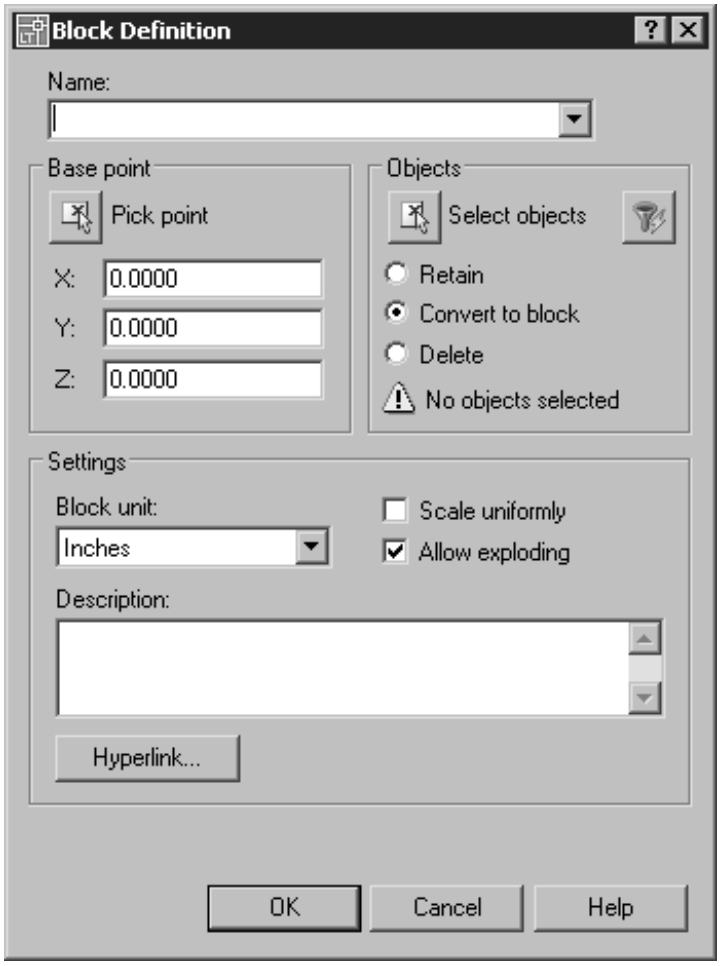

Figure 14-4 *The* ***Block Definition*** *dialog box*

In the **Block Definition** dialog box, you can enter the name of the block you want to create in the **Name** edit box. All the block names present in a current drawing are displayed in the **Name** drop-down list in an alphabetical and numerical order. If a drawing contains more than six blocks, a scroll bar appears on the right side of the **Name** drop-down list, which can be moved up and down to view all the blocks in the drawing. This way you can verify whether a block you have defined has been saved. By default, the block name can have up to 255 characters. The name can contain letters, digits, blank spaces as well as any special characters including the $ (dollar sign), - (hyphen), and _ (underscore), provided they are not being used for any other purpose by AutoCAD LT or Windows.

Note

*The block name is controlled by the **EXTNAMES** system variable and the default value is 1. If the value is set to 0, the block name will be only thirty-one characters long and will not include spaces or any other special characters apart from a $ (dollar sign), - (hyphen), or _ (underscore).*

If a block already exists with the block name that you have specified in the **Name** edit box, an AutoCAD LT dialog box, warning that the block name is already defined, is displayed when you choose the **OK** button in the **Block Definition** dialog box. In this dialog box, you can either redefine the existing block by choosing the **Yes** button or you can exit it by choosing the **No** button. You can then use another name for the block in the dialog box for it.

After you have specified a block name, you are required to specify the insertion base point. This point is used as a reference point to insert the block. Usually, either the center or the lower left corner of the block is defined as the insertion base point. Later on, when you insert the block, you will notice that it appears at the insertion point, and you can insert the block with reference to this point. The point you specify as the insertion base point is taken as the origin point of the block's coordinate system. You can specify the insertion point by choosing the **Pick point** button in the **Base point** area of the dialog box. The dialog box is temporarily removed, and you can select a base point on the screen. You can also enter the coordinates in the **X:**, **Y:**, and **Z:** edit boxes instead of selecting a point on screen. Once the insertion base point is specified, the dialog box reappears and the *X*, *Y*, and *Z* coordinates of the insertion base point are displayed in the **X**, **Y**, and **Z** edit boxes, respectively. If no insertion base point is selected, AutoCAD LT assumes the insertion point coordinates to be 0,0,0, which are the default coordinates.

Tip

In drawings where the insertion point of a block is important, for example, in the case of inserting the block of a door symbol in architectural plans, it may be a good idea to first specify the requisite scale factors and rotation angles and then the insertion point. This way, you are able to preview the block symbol as it is to be inserted.

After specifying the insertion base point, you are required to select the objects that will constitute the block. Until the objects are selected, AutoCAD LT displays a warning: **No objects selected**, at the bottom of the **Objects** area. Choose the **Select objects** button. The dialog box is temporarily removed from the screen. You can select the objects on the screen using any selection method. After completing the selection process, right-click or press the ENTER key to return to the

dialog box. The number of objects selected is displayed at the bottom of the **Objects** area of the dialog box.

The **Objects** area of the **Block Definition** dialog box also has a **QuickSelect** button. If you choose this button, the **Quick Select** dialog box is displayed, which allows you to define a selection set based on the properties of objects. **Quick Select** is used in cases where the drawings are very large and complex. The **Quick Select** dialog box has been discussed earlier in Chapter 6, Editing Sketched Objects-II.

In the **Objects** area, if you select the **Retain** radio button, it retains the selected objects that form the block as individual objects and does not convert them into a block after the block has been defined. If you select the **Convert to block** radio button, it converts the selected objects into a block after you have defined the block. If you select the **Delete** radio button, it deletes the selected objects from the drawing after the block has been defined.

Tip

*When you select the **Delete** radio button in the **Objects** area when defining a block, the selected objects are removed from the drawing. If you want them back, you can use the **OOPS** command. Using **U** at the Command prompt, or choosing the **Undo** button from the **Standard** toolbar will undo the block definition from the drawing.*

In the **Settings Area**, if you select the **Scale Uniformly** check box, the block can only be scaled uniformly in all directions, while inserting. If you select the **Allow Exploding** check box, the block can be exploded into separate entities using the **EXPLODE** command, whenever required.

The **Blocks unit** drop-down list displays the units that will be used when inserting the current block. For example, if the block is created with inches as the units and you select **Feet** from the **Block unit** drop-down list, the block will be scaled to feet.

After setting all the parameters in the **Block Definition** dialog box, choose the **OK** button to complete defining the block.

Tip

It is a good idea to create a unit block, especially for drawings where the same block is to be inserted with various scale factors. A unit block can be defined as a block that is created within a unit square area (1 unit x 1 unit). This way, every time you specify a scale factor, the block simply gets enlarged or reduced by the said amount directly, since the multiplication factor is 1.

Note

*You can also create blocks using the command line by entering **-BLOCK** at the Command prompt.*

Converting Objects Into a Block Using the Command Line

You can use the **-BLOCK** command to create blocks from the command line. The following prompt sequence saves a symbol as a block named SYMBOLX.

Command: **-BLOCK**
Enter block name or [?]: **SYMBOLX**
Specify insertion base point: *Select a point.*
Select objects: *Select all the objects comprising the block.*
Select objects: *Press ENTER when selection is complete.*

AutoCAD LT acknowledges the creation of the block by removing the objects defining the block from the screen. You can get the objects back at the same position by entering **OOPS**. You can use the **?** option to list all the blocks created in the drawing. The prompt sequence is given next.

Command: **-BLOCK**
Enter block name or [?]: ?
Enter block(s) to list <*>: Enter

Information similar to the following is displayed in the AutoCAD LTText Window.

Defined blocks
"BLK1"
"BLK2"
"SYMBOLX"

User Blocks	*External References*	*Dependent Blocks*	*Unnamed Blocks*
n	*n*	*n*	*n*

Here **n** denotes a numeric value.

Defined blocks. The names of all the blocks defined in the drawing.

User Blocks. The number of blocks created by the user.

External References. The number of external references. These are the drawings that are referenced with the **XREF** command and are discussed later in Chapter 16.

Dependent Blocks. The number of externally dependent blocks. These are the blocks that are present in a referenced drawing.

Unnamed blocks. The number of unnamed blocks in the drawing. These are objects such as associative dimensions and hatch patterns.

Exercise 1 *General*

Draw a unit radius circle, and use the **BLOCK** command to create a block. Name the block CIRCLE. Figure 14-5 shows the steps involved in creating a block. Select the center as the insertion point. Verify if the block CIRCLE was saved.

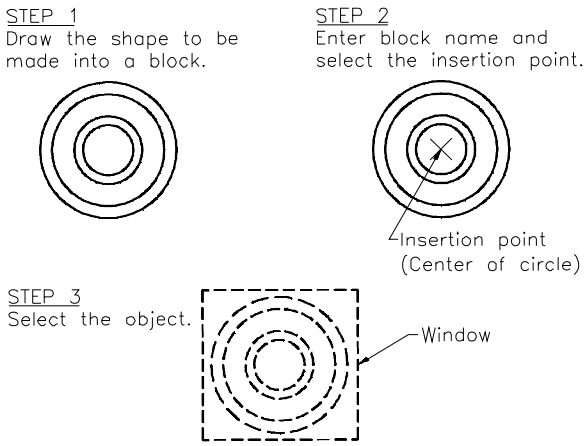

Figure 14-5 *Using the* ***BLOCK*** *command*

INSERTING THE BLOCKS USING THE INSERT DIALOG BOX

Toolbar:	Insert > Insert Block
	Draw > Insert Block
Menu:	Insert > Block
Command:	INSERT

Figure 14-6 *Invoking the* ***INSERT*** *command from the* ***Insert*** *toolbar*

Insertion of a predefined block is possible with the **INSERT** command (Figure 14-6). An inserted block is called a block reference. You should determine the layer on which you want to insert the block, the location where you want to insert it, its size, and the angle by which you want the block to be rotated, prior to insertion. If the layer on which you want to insert the block is not current, you can use the **Layer Control** drop-down list in the **Layers** toolbar or choose the **Current** button in the **Layer Properties Manager** dialog box to make it current. When you invoke the **INSERT** command, the **Insert** dialog box (Figure 14-7) is displayed. You can specify the different parameters of the block or external file to be inserted in the **Insert** dialog box.

Name

This drop-down is used to specify the name of the block to be inserted. Select the name of the block to be inserted from this drop-down list. You can also enter the name of the block to be inserted. All the blocks created in the current drawing are available in the **Name** drop-down list.

Note

The last block name selected from the ***Name*** *drop-down list and inserted becomes the default name for the next insertion and is displayed in this drop-down list.*

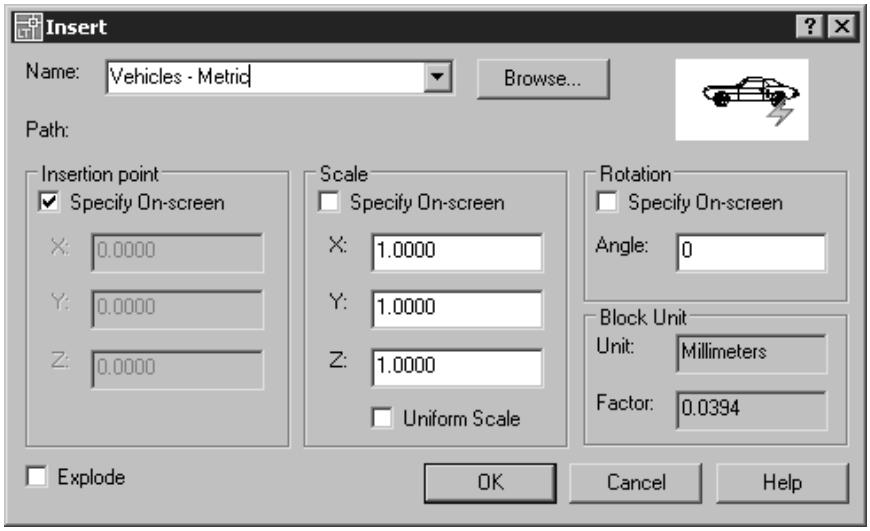

Figure 14-7 *The* ***Insert*** *dialog box*

The **Browse** button is used to insert external files. When you choose this button, the **Select Drawing File** dialog box is displayed. This dialog box works in a manner similar to the standard **Select File** dialog box, which has been discussed earlier in Chapter 1. You can select a drawing file from the listed drawing files existing in a current directory, and can change the directory by selecting the desired directory in the **Look in** drop-down list. Once you select the drawing file in this dialog box and choose the **Open** button, the drawing file name is displayed in the **Name** drop-down list of the **Insert** dialog box. **Path** displays the path of the external file selected to be inserted. Now, if you want to change the block name, just change it in the **Name** drop-down list. In this manner, the drawing can be inserted with a different name. Changing the original drawing does not affect the inserted drawing.

Note

If the name you have specified in the ***Name*** *edit box does not exist as a block in the current drawing, AutoCAD LT will search the drives and directories on the path (specified in the* ***Options*** *dialog box) for a drawing of the same name and if it finds it, it will insert it.*

Also, suppose you have inserted a block in a drawing and then you want to insert a drawing with the same name as the block, AutoCAD LT will display a message saying that the specified block already exists and will ask if you want to redefine it. If you choose ***Yes****, the block in the drawing gets replaced by the drawing with the same name, that is, the block gets redefined.*

Tip

You can create a block in a current drawing from an existing drawing file. This saves time by avoiding redrawing the object as a block. Locate and select an existing file using the ***Browse*** *button and rename it with the name that you want to assign to the block in the* ***Name*** *edit box. When you choose* ***OK****, you can insert the block in the drawing or press the ESC key. The new block gets added to the current drawing.*

Insertion point Area

When a block is inserted, the coordinate system of the block is aligned parallel to the current UCS. In the **Insertion point** area, you can specify the *X*, *Y*, and *Z* coordinate locations of the block insertion point in the **X**, **Y**, and **Z** edit boxes, respectively. If you select the **Specify On-screen** check box, the **X**, **Y**, and **Z** edit boxes are not available and you can specify the insertion point on the screen. By default, the **Specify On-screen** check box is selected and hence, you can specify the insertion point on the screen.

Scale Area

In this area, you can specify the X, Y, and Z scale factors of the block to be inserted in the **X**, **Y**, and **Z** edit boxes, respectively. By selecting the **Specify On-screen** check box, you can specify the scale of the block at which it has to be inserted on the screen. The **Specify On-screen** check box is cleared by default and the block is inserted with the scale factors of 1 along the three axes. Also, if the **Uniform Scale** check box is selected, the X scale factor value is assumed for the Y and Z scale factors also. This means that if this check box is selected, you need to specify only the X scale factor. All the dimensions in the block are multiplied by the X, Y, and Z scale factors you specify. These scale factors allow you to stretch or compress a block along the *X* and *Y* axes, respectively, according to your needs. You can also insert 3D objects into a drawing by specifying the third scale factor (since 3D objects have three dimensions), the Z scale factor. Figure 14-8 shows variations of the X and Y scale factors for the block, CIRCLE, during insertion.

Tip

By specifying negative scale factors, you can insert a mirror image of a block along the particular axis. A negative scale factor for both the X and Y axes is the same as rotating the block reference through 180-degree, since it mirrors the block reference in the opposite quadrant of the coordinate system. In Figure 14-9, the effect of negative scale factor on block (DOOR) can be marked by a change in position of insertion point marked with an (X).

Also, specifying a scale factor of less than 1 inserts the block reference smaller than the original size and a scale factor greater than 1 inserts the block reference larger than its original size.

Rotation Area

You can enter the angle of rotation for the block to be inserted in the **Angle** edit box. The insertion point is taken as the location about which the rotation takes place. Selecting the **Specify On-screen** check box allows you to specify the angle of rotation on the screen. This check box is cleared by default and the block is inserted at an angle of zero-degree.

Explode Check Box

By selecting this check box, the inserted block is inserted as a collection of individual objects. The function of the **Explode** check box is identical to that of the **EXPLODE** command. Once a block is exploded, the X, Y, and Z scale factors are identical. Hence, you are provided access to only one scale factor edit box (**X** edit box), the **Y** and **Z** edit boxes are not available, and the **Uniform Scale** check box also gets selected. The X scale factor is assigned to the Y and Z scale factors too. You must enter a positive scale factor value.

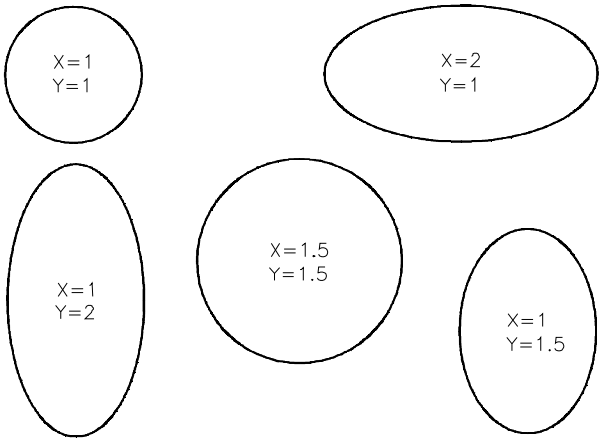

Figure 14-8 *Block inserted with different scale factors*

Note

If you select the ***Explode*** *check box before insertion, the block reference is exploded and the objects are inserted with their original properties such as layer, color, and linetype.*

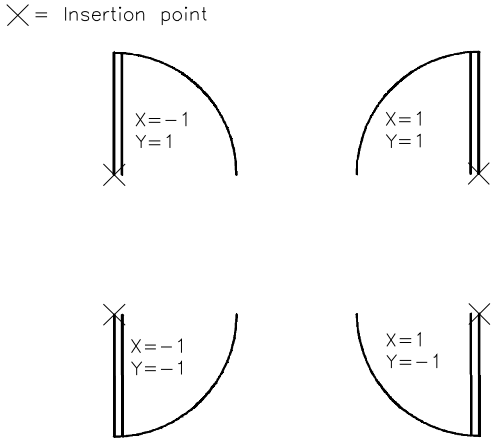

Figure 14-9 *Block inserted using negative scale factors*

Once you have entered the relevant information in the dialog box, choose the **OK** button. The **Insert** dialog box is removed from the screen and if you have selected the **Specify On-Screen** check boxes, you can specify the insertion point, scale, and angle of rotation with a pointing device. Whenever the insertion point is to be specified on screen (by default), you can specify scale factors and rotation angle values that will override the values specified in the dialog box, using the command line. Before you specify the insertion point on the screen, you can right-click to display the shortcut menu, which has all the options available through the command line.

However, if you have already specified an insertion point in the dialog box and have selected the **Specify on-screen** check boxes in the **Scale** or **Rotation** areas of the **Insert** dialog box, you are allowed to specify only the scale factors or the rotation angle through the command line. You can also use the command line where the following prompts appear.

Specify insertion point or [Basepoint/Scale/X/Y/Z/Rotate/PScale/PX/PY/PZ/PRotate]:
Enter X scale factor, specify opposite corner, or [Corner/XYZ] <1>:
Enter Y scale factor <use X scale factor>:
Specify rotation angle <0>:

Tip
Using the command line allows you to override scale factors and rotation angles already specified in the dialog box.

The command line options available are discussed next.

Scale	**X**	**Y**	**Z**	**Rotate**
PScale	**PX**	**PY**	**PZ**	**PRotate**

Basepoint

If you enter B at the **Specify Insertion point** prompt, or select the option from the selection preview you are again prompted to specify the **Base Point**. Specify the **Base Point** by clicking the cursor at the desired location. This point will now act as the insertion point. All prompts are also displayed at the cursor input so there is no need to always take a look on the command prompt. The prompt sequence for this option is given next.

Specify insertion point or
[Basepoint/Scale/X/Y/Z/Rotate/PScale/PX/PY/PZ/PRotate]: B Enter
Specify base point: *Specify base point*
Specify insertion point: *Specify insertion point*

Scale

If you enter S at the **Specify Insertion point** prompt, you are asked to enter the scale factor. After entering the scale factor, the block assumes the specified scale factor, and AutoCAD LT lets you drag the block until you locate the insertion point on the screen. The *X*, *Y*, and *Z* axes are uniformly scaled by the specified scale factor. The prompt sequence for this option is given next.

Specify insertion point or [Basepoint/Scale/X/Y/Z/Rotate/PScale/PX/PY/PZ/PRotate]: **S**
Specify scale factor for XYZ axes: *Enter a value to preset general scale factor*.
Specify insertion point: *Select the insertion point*.
Specify rotation angle <0>: *Specify angle of rotation*.

X, Y, Z

With X, Y, or Z as the response to the **Specify insertion point** prompt, you can specify the X, Y,

or Z scale factors before specifying the insertion point. The prompt sequence when you use the **X** option is given next.

Specify insertion point or [Basepoint/Scale/X/Y/Z/Rotate/PScale/PX/PY/PZ/PRotate]: **X**
Specify X scale factor: *Enter a value for the X scale factor.*
Specify insertion point: *Select the insertion point*.
Specify rotation angle <0>: *Specify angle of rotation*.

Rotate

If you enter R at the **Specify insertion point** prompt, you are asked to specify the rotation angle. You can enter the angle of rotation or specify the angle by specifying two points on the screen. Dragging is resumed only when you specify the angle, and the block assumes the specified rotation angle. The prompt sequence for this option is given next.

Specify insertion point or [Basepoint/Scale/X/Y/Z/Rotate/PScale/PX/PY/PZ/PRotate]: **R**
Specify rotation angle: *Enter a value for the rotation angle*.
Specify insertion point: *Select the insertion point*.
Enter X scale factor, specify opposite corner, or [Corner/XYZ] <1>: *Specify the X scale factor.*
Enter Y scale factor <use X scale factor>: *Specify the Y scale factor*.

PScale

The **PScale** option is similar to the **Scale** option. The difference is that in the case of the **PScale** option, the scale factor specified reflects only in the display of the block while it is dragged to the desired position. This implies that you can preview the effect of this scale factor on the block before actually applying it. After you have specified the insertion point for the block, you are again prompted for a scale factor. If you do not enter the scale factor, the block is drawn exactly as it was when created. The prompt sequence for this option is given next.

Specify insertion point or [Basepoint/Scale/X/Y/Z/Rotate/PScale/PX/PY/PZ/PRotate]: **PS**
Specify preview scale factor for XYZ axes: *Enter a value to preview the general scale factor*.
Specify insertion point: *Specify the insertion point for the block*.
Enter X scale factor, specify opposite corner, or [Corner/XYZ] <1>: *Specify the X scale factor.*
Enter Y scale factor <use X scale factor>: *Specify the Y scale factor*.
Specify rotation angle <0>: *Specify angle of rotation*.

PX, PY, PZ

These options are similar to the **PScale** option. The only difference is that the X, Y, or Z scale factors specified are reflected only in the display of the block while it is dragged to the desired position. After you have specified the insertion point for the block, you are again prompted for the X scale factor and the Y scale factor. If you do not enter the scale factor, the block is drawn exactly as it was when created.

Specify insertion point or [Basepoint/Scale/X/Y/Z/Rotate/PScale/PX/PY/PZ/PRotate]: **PX**
Specify preview X scale factor: *Enter a value to preview the X scale factor*.
Specify insertion point: *Specify the insertion point for the block*.
Enter X scale factor, specify opposite corner, or [Corner/XYZ] <1>: *Specify the X scale factor*.

Enter Y scale factor <use X scale factor>: *Specify the Y scale factor.*
Specify rotation angle <0>: *Specify angle of rotation.*

Note
*If you have already specified scale factors in the **X, Y**, and **Z** edit boxes of the **Scale** area of the **Insert** dialog box, the **PScale**, **PX**, **PY**, and **PZ** options work equivalent to the **Scale**, **X**, **Y**, and **Z** options respectively and allow you to insert the block with the PScale, PX, PY, or PZ values you specified.*

PRotate

The **PRotate** option is similar to the **Rotate** option. The difference is that the rotation angle specified reflects only in the display of the block while it is dragged to the desired position. After you have specified the insertion point for the block, you are again prompted for the angle of rotation. If you do not enter the rotation angle, the block is drawn exactly as it was when created (with the same angle of rotation as specified on the creation of the block). The prompt sequence is given next.

Specify insertion point or [Basepoint/Scale/X/Y/Z/Rotate/PScale/PX/PY/PZ/PRotate]: **PR**
Specify preview rotation angle: *Specify the preview value for rotation.*
Specify insertion point: Specify the insertion point for the block.
Enter X scale factor, specify opposite corner, or [Corner/XYZ]: *Specify the X scale factor.*
Enter Y scale factor < use X scale factor>: *Specify the Y scale factor.*
Specify rotation angle <0>: *Specify angle of rotation.*

Note
*If you have already specified the rotation angle in the **Angle** edit box of the **Rotation** area of the **Insert** dialog box, the **PRotate** option works equivalent to the **Rotate** option and allows you to insert the block with the PRotate value you specified.*

Tip
The preview options (PScale, PX, PY, PZ and PRotate) that are preceded with a P allow you to view the effect of the scale factor or rotation angle specified before actually applying it to the block reference.

The XYZ and Corner Options

When you are specifying the insertion point and scale factors on the screen, the following prompt appears after you have selected an insertion point.

Enter X scale factor, specify opposite corner or [Corner/XYZ]: *Enter X scale factor, specify opposite corner or select an option.*

Here, the **XYZ** option can be used to enter a 3D block reference and the successive prompts allow you to specify the X, Y, and Z scale factors individually.

With the **Corner** option, you can specify both X and Y scale factors at the same time. When you invoke this option, and **DRAGMODE** is turned off, you are prompted to specify the other corner (the first corner of the box is the insertion point). You can also enter a coordinate value instead of moving the cursor. The length and breadth of the box are taken as the X and Y scale factors for the block. For example, if the X and Y dimensions (length and width) of the box are the same as that of the block, the block will be drawn without any change. The points selected should be above and to the right of the insertion block. Mirror images will be produced if points selected are below or to the left of the insertion point. The prompt sequence is given next.

Enter X scale factor, specify opposite corner or [Corner/XYZ]: **C**
Specify opposite corner: *Select a point as the corner*.

The **Corner** option also allows you to use a dynamic scaling technique when **DRAGMODE** is turned to Auto (default). You can also move the cursor at the **Enter X scale factor** prompt to change the block size dynamically and, when the size meets your requirements, select a point.

Note

*You should try to avoid using the **Corner** option if you want to have identical X and Y scale factors because it is difficult to select a point whose X distance equals its Y distance, unless the **SNAP** mode is on. If you use the **Corner** option, it is better to specify the X and Y scale factors explicitly or select the corner by entering coordinates.*

INSERTING BLOCKS USING THE COMMAND LINE

Predefined blocks can also be inserted in a drawing with the **-INSERT** command, using the command line. When using the **-INSERT** command, the dialog box is not displayed. To insert a drawing file as a block, enter the file name at the **Enter block name or [?]** prompt. You can enter ? if you do not know the name of the blocks in the drawing. To create a block with a different name from the drawing file, enter **blockname= file name** at the **Enter block name or[?]** prompt. If you enter **(~)** tilde character at the **Enter block name or [?]** prompt, the **Select Drawing File** dialog box is displayed on the screen. If you enter an **(*)** asterisk before entering the block name, the block is automatically exploded upon insertion. All the command line options discussed earlier are available through the **-INSERT** command. Also, if you make changes to a block and want to update the block in the existing drawing, enter **blockname=** at the **Specify insertion point** prompt. AutoCAD LT will display the prompt:

Block "current" already exists. Redefine it? [Yes/No] <No>: *Enter y to redefine it*.

Note

If you create a template file that has blocks created and stored in it and use it to create a new drawing, the blocks are available in the new drawing also.

Also when you insert a drawing into a current drawing, all the blocks belonging to the inserted drawing are also brought into the current drawing.

Exercise 1

General

Using the dialog box, insert a block SQUARE into a drawing. The block insertion point is (1,2). The X scale factor is 2 units, the Y scale factor is 2 units, and the angle of rotation is 35-degree. It is assumed that the block SQUARE is already defined in the current drawing.

Choose the **Insert Block** button from the **Draw** toolbar. The **Insert** dialog box is displayed on the screen. In the **Name** edit box, enter SQUARE or select the Block SQUARE from the **Name** drop-down list. Clear the **Specify On-screen** check box. Now, in the **Insertion point** area, enter 1 in the **X** edit box and 2 in the **Y** edit box. In the **Scale** area, enter 2 in the **X** edit box and 2 in the **Y** edit box. In the **Rotation** area, enter 35 in the **Angle** edit box. Choose the **OK** button to insert the block on the screen.

Exercise 2

General

a. Insert the block CIRCLE created in Exercise 1. Use different X and Y scale factors to get different shapes after inserting this block.
b. Insert the block CIRCLE created in Exercise 1. Use the **Corner** option to specify the scale factor.

Exercise 3

General

a. Construct a triangle and form a block of it. Name the block TRIANGLE. Now, set the Y scale factor of the inserted block as 2.
b. Insert the block TRIANGLE with a rotation angle of 45-degree. After defining the insertion point, enter an X and a Y scale factor of 2.

USING DESIGNCENTER TO INSERT BLOCKS

You can use the **DESIGNCENTER** to locate, preview, copy, or insert blocks or existing drawings into a current drawing. On the **Standard** toolbar, choose the **DesignCenter** button to display the **DESIGNCENTER** window (Figure 14-10). In this window, choose the **Tree View Toggle** button to display the **tree pane** on the left side, if not already displayed. By default, the tree pane is displayed. Expand **My Computer** to display the *C:/Program Files/ACADLT 2006/Sample/DesignCenter* folder, by clicking on the plus (+) signs on the left of the respective folders. Click on the plus sign adjacent to the folder to display its contents. Select a drawing file you wish to use to insert blocks from and then click on the plus sign adjacent to the drawing again. All the icons depicting the different types of content in the selected drawing are displayed, that is, Blocks, Dimstyles, Layers, Linetypes, Textstyles, and so on. Select **Blocks** by clicking on it and a list of blocks in the drawing is displayed in the palette. Select the block you wish to insert, and drag and drop it into the current drawing. Later, you can move it in the drawing to the desired location. You can also right-click on the block name to display a shortcut menu. Select **Insert Block** from the shortcut menu. The **Insert** dialog box is displayed. Here, you can specify the **Insertion point**, **scale**, and **rotation angle** in the respective edit boxes. If you select the **Specify On-Screen** check boxes in the **Insert** dialog box, you are allowed to specify these parameters on the screen. The selected block is inserted into the current drawing based on

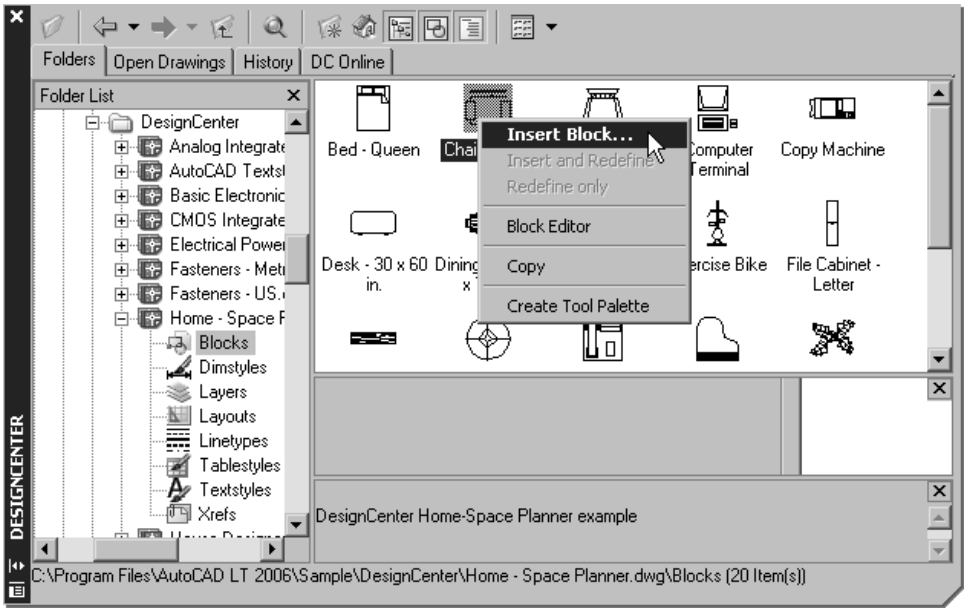

Figure 14-10 *Using the* ***DESIGNCENTER*** *to insert blocks*

the type of units specified when the block was created. For example, if you had created a block of 1" X 1", and specified feet as units at that time, the block when inserted using the DESIGNCENTER, will be 12" X 12". You can also choose **Copy** from the shortcut menu; the selected block is copied to the clipboard. Now, you can right-click in the drawing area to display a shortcut menu and choose **Paste**. The selected block is displayed attached to the cursor and as you move the cursor, the block also moves with it. You can now select a point where you want to paste the block. The advantage of this option over drag and drop is that you can select an insertion point at the time of pasting. In the case of a drag and drop operation, you need to move the inserted block to a specific point later and it is an additional step.

If you want to insert an entire drawing, select the folder in which the drawing resides by double-clicking on the folder. All the contents in the folder are displayed in the palette. Drag and drop the desired drawing into the current drawing. You can also select the drawing and right-click to display a shortcut menu. Choose **Insert as Block** from the shortcut menu. The **Insert** dialog box is displayed, where you can specify the Insertion point, scale factors, and rotation angle, if required. You can also select the **Specify On-screen** check boxes to select everything on the screen.

Note

For a detailed explanation of the DESIGNCENTER, see Chapter 6, Editing Sketched Objects-II.

USING TOOL PALETTES TO INSERT BLOCKS

You can use the **TOOL PALETTES** window shown in Figure 14-11 to insert predefined blocks in the current drawing. The **TOOL PALETTES** window has three tabs: **Sample Office project**, **Imperial Hatches**, and **ISO Hatches**. In this chapter, you will learn how to insert blocks using the **Sample Office project** tab of the **TOOL PALETTES**.

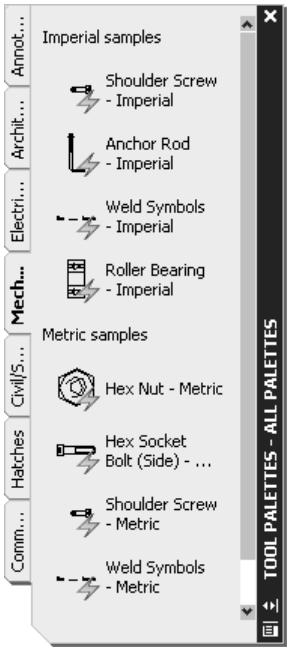

Figure 14-11 *The* ***TOOL PALETTES*** *window*

Inserting Blocks in the Drawing

AutoCAD LT provides two methods to insert blocks from the **TOOL PALETTES**: **Drag and Drop** method and **Select and Place** method. Both these methods of inserting blocks using the **TOOL PALETTES** are discussed next.

Drag and Drop Method

To insert blocks from the **TOOL PALETTES** in the drawing using this method, move the cursor over the desired predefined block in the **TOOL PALETTES**. You will notice that as you move the cursor over the block, the block icon gets converted into a 3D icon. Also, a tooltip is displayed that shows the name and description of the block. Press and hold the left mouse button and drag the cursor to the drawing area. Release the left mouse button, and you will notice that the selected block is inserted in the drawing. You may need to modify the drawing display area to view the block. Remember that when a block is inserted from the **TOOL PALETTES** using the drag and drop method, you are not prompted to specify the rotation angle or the scale of the block. The blocks are automatically inserted with their default scale factor and rotation angle.

Select and Place Method

You can also insert the desired block in the drawings using the select and place method. To insert the block, move the cursor over the desired block in the **TOOL PALETTES**. The block icon is changed to a 3D icon. Press the left mouse button, the selected block is attached to the cursor and the **Specify insertion point or [Scale/X/Y/Z/Rotate/PScale/PX/PY/PZ/PRotate]** prompt is displayed. Move the cursor to the required location in the drawing area and press the left mouse button. The selected block is inserted at the specified location.

Modifying the Properties of the Blocks Available in the TOOL PALETTES

To modify the properties of the blocks, move the cursor over the block in the **TOOL PALETTES** and right-click on it to display the shortcut menu. Using the options in this shortcut menu, you can cut or copy the desired block available in one tab of **TOOL PALETTES** and paste it on the other tab. You can also delete and rename the selected block using the **Delete**

Tool and **Rename** options, respectively. To modify the properties of the block, choose **Properties** from the shortcut menu. The **Tool Properties** dialog box is displayed as, shown in Figure 14-12.

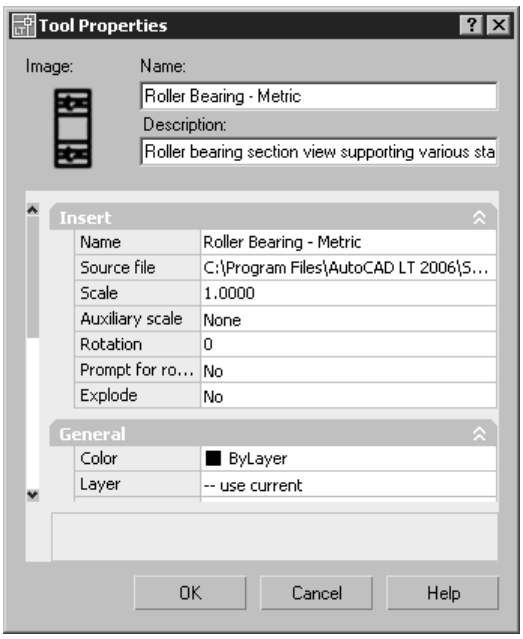

Figure 14-12 *The* ***Tool Properties*** *dialog box*

In the **Tool Properties** dialog box, the name of the selected block is displayed in the **Name** edit box. You can rename the block by entering a new name in the **Name** edit box. The **Image** area available on the left of the **Name** edit box displays the image of the selected block. If you enter a description of the block in the **Description** text box, it is stored with the block definition in the **TOOL PALETTES**. Now, when you move the cursor over the block in **TOOL PALETTES** and pause for a second, the description of the block appears along with its name in the tooltip. Note that when you select a particular field in the **Tool Properties** dialog box, its function is displayed in the description box available at the bottom of the dialog box. The **Tool Properties** dialog box displays the properties of the selected block under the following categories.

Insert

In this category, you can specify the insertion properties of the selected block such as its name, original location of the block file, scale, and rotation angle. The **Name** edit box specifies the name of the block. The **Source File** edit box displays the location of the file in which the selected block is created. When you choose the [**...**] button in the **Source File** edit box, AutoCAD LTdisplays the location of the file in the **Select Linked Drawing** dialog box. The **Scale** edit box is used to specify the scale factor of the block. The block will be inserted in the drawing according to the scale factor specified in this edit box. You can enter the angle of rotation for the block to be inserted in the **Rotation** edit box. The **Explode** edit box is used to specify whether the block will be exploded while inserting or will be inserted as a single entity.

General

In this category, you can specify the general properties of the block such as the **Color**, **Layer**, **Linetype**, **Plot style**, and **Lineweight** for the selected block. The properties of a particular field can be modified from the drop-down list available on selecting that field.

ADDING BLOCKS IN THE TOOL PALETTES

By default, the **TOOL PALETTES** window displays the predefined blocks available in AutoCAD. You can also add the desired block and the drawing file to the **TOOL PALETTES** window. This is done using the **DESIGNCENTER**. AutoCAD LT provides two methods for adding the blocks from the **DESIGNCENTER** to the **TOOL PALETTES**: **Drag and Drop** method and **Shortcut menu**. These two methods are discussed next.

Drag and Drop Method

To add the blocks from the **DESIGNCENTER** in the **TOOL PALETTES**, move the cursor over the desired block in the **DESIGNCENTER**. Press and hold the left mouse button on the block and drag the cursor to the **TOOL PALETTES** window. As you drag the cursor in the **TOOL PALETTES** window, you will notice that a box with a + sign is attached to the cursor and a black line appears on the **TOOL PALETTES** window, as shown in Figure 14-13. If you move the cursor up and down in the **TOOL PALETTES**, the black line also moves between the two consecutive blocks. This line is used to define the position of the block to be inserted in the **TOOL PALETTES** window. Release the left mouse button and you will notice that the selected block is added to the location specified by the black line in the **TOOL PALETTES**.

Shortcut Menu

You can also add the desired block from the **DESIGNCENTER** to the **TOOL PALETTES** using the shortcut menu. To add the block, move the cursor over the desired block in the **DESIGNCENTER** and right-click on it to display a shortcut menu. Choose **Create Tool Palette** from the shortcut menu. You will notice that a new tab with the name **New Tool Palette** is added to the **TOOL PALETTES** and the block is added in the new tab of the **TOOL PALETTES**. Also, a text box appears that displays the current name of the tab. You can change the name of the tab by entering a new name in this text box.

You can also add a number of blocks available in a drawing simultaneously to the **TOOL PALETTES** using the following two methods.

Right-click on the **Palette** area of the **DESIGNCENTER** to display the shortcut menu. Choose **Create Tool Palette** from the shortcut menu; a new tab is added to the **TOOL PALETTES** with the same name as that of the drawing selected in the **DESIGNCENTER**. This new tab contains all the blocks that were available in the drawing that you selected from the **DESIGNCENTER**.

You can also add the blocks available in the drawing simultaneously by right-clicking on the drawing in the **Tree View** of the **DESIGNCENTER**. A shortcut menu is displayed. Choose **Create Tool Palette** from the shortcut menu and you will notice that a new tab is added to the **TOOL PALETTES**, which contains all the blocks that were available in the selected drawing. You will also notice that the new tab has the same name as that of the selected drawing.

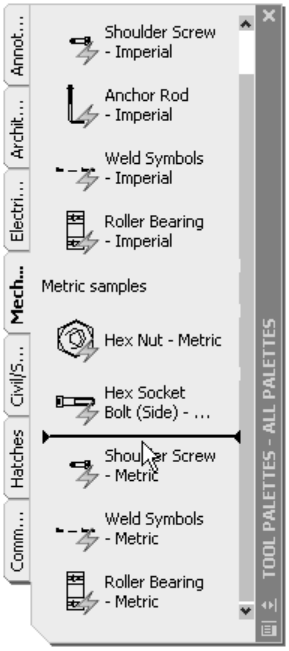

Figure 14-13 *Specifying the location of the block to be inserted in the* ***TOOL PALETTES*** *window*

MODIFYING EXISTING BLOCKS IN THE TOOL PALETTES

If you modify an existing block that was added to the **TOOL PALETTES**, and then insert it using the **TOOL PALETTES** in the same or a new drawing, you will notice that the modified block is inserted and not the original block. But note that if you insert the modified block from the **TOOL PALETTES** in a drawing in which the original block was already inserted, AutoCAD LT inserts the original block and not the modified block. This is because the file already has a block of the same name in its memory.

To insert the modified block, you first need to delete the original block from the current drawing using the **ERASE** command. Next, you need to delete the block from the memory of the current drawing. The unused block can be deleted from the memory of the current drawing using the **PURGE** command. To invoke this command, enter **PURGE** at the Command prompt. The **Purge** dialog box is displayed. Choose the (+) sign located on the left of **Blocks** in the tree view available in the **Items not used in drawing** area. You will notice that a list of blocks available in the drawing is shown. Select the original block to be deleted from the memory of the current drawing and then choose the **Purge** button. The **Confirm Purge** dialog box is displayed that confirms the purging of the selected item. Choose **Yes** in this dialog box and then choose the **Close** button to exit the **Purge** dialog box. Next, when you insert the block using the **TOOL PALETTES**, the modified block is inserted in the drawing.

Note

*You will learn more about the **PURGE** command in Chapter18, Grouping and Advanced Editing of Sketched Objects. Deleting unused blocks using the command line is, however, discussed later in this chapter.*

*If you create a block with the name that is defined in the **TOOL PALETTES**, the block in the **TOOL PALETTES** is redefined in the current drawing. However, when you open a new drawing and insert the block using the **TOOL PALETTES**, the original block will be inserted.*

DYNAMIC BLOCKS

The concept of the dynamic blocks has been introduced in this release of AutoCAD LT. You can dynamicaly manipulate the dynamic blocks in the drawing. It provides you the flexibility of modifying the geometry of the inserted blocks dynamically using the grips or using the **PROPERTIES** window. The blocks inserted using the **TOOL PALETTES** are dynamic blocks. The necessity of dynamic manipulation arises due to design needs. For example, if you have inserted Aluminium Window (elevation) block from the **TOOL PALETTES**, you may be required to change the size of the window in the drawing. With the facility of dynamic manipulation of dynamic blocks, all you have to do is just select the block to display the grips. Now select the grip and drag it to manipulate the block dynamically. Grips of different shapes are available in dynamic blocks. These grips may vary from block to block. There is a specific purpose of each grip. The purpose of each grip is discussed next. Figure 14-14 lists the different types of grips.

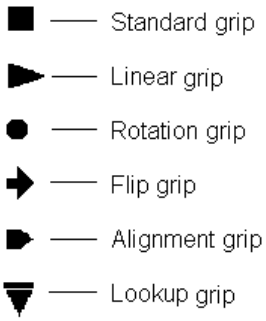

***Figure 14-14** Types of **Grips** in dynamic blocks*

Standard Grip

The **Standard** grip is available with almost all dynamic blocks. This grip is used to manipulate the block in any direction, in the current plane. To manipulate a block dynamically using the **Standard** grip, select the grip using the left mouse button and drag it to specify the new location. Figure 14-15 displays a block being manipulated dynamically using the **Standard** grip.

Linear Grip

The **Linear** grip is used to manipulate the block only in the linear direction. Figure 14-17 displays a dynamic block being manipulated using the **Linear** grip. Take a look at the location of the cursor and the direction of manipulation. Since the block is bound to be manipulated in linear direction, irrespective of the angular movement of the cursor, it will be manipulated linearly. The small gray lines shown in the Figure 14-16 are predefined steps. Predefined steps are the scales, in which the block will be manipulated. You cannot size the block to any other scale other than the steps provided.

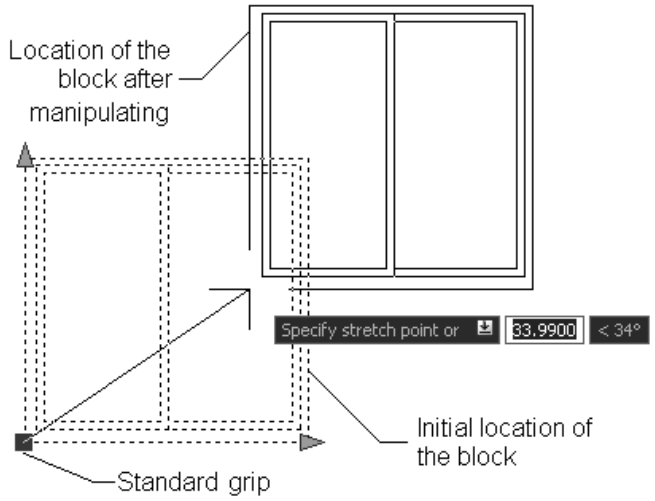

Figure 14-15 *Manupulation of the block using the* ***Standard*** *grip*

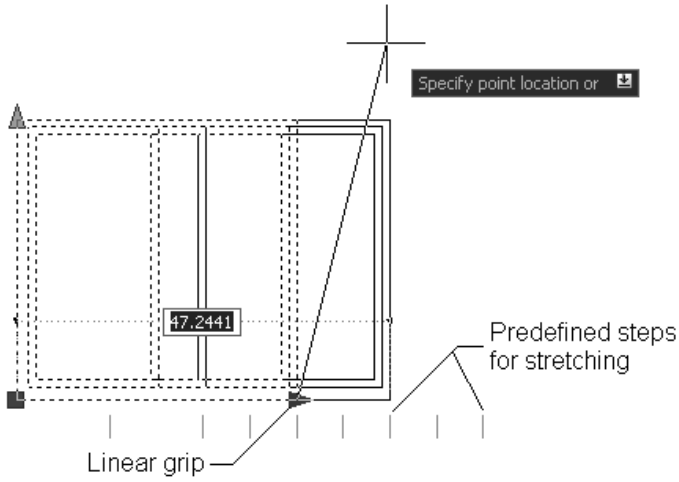

Figure 14-16 *Manipulation of the block using the* ***Linear*** *grip*

Rotation Grip

The **Rotation** grip is used to manipulate the block about a basepoint. To manipulate the block, select the **Rotation** grip and move it; the block will also rotate accordingly, with respect to the base point.

Flip Grip

The **Flip** grip is used to manipulate the block about a flip line. Figure 14-17 displays dynamic manipulation of the block using the **Flip** grip. Click on the grip once to flip the entity. If you click on the grip again then the entity will flip back to its original position.

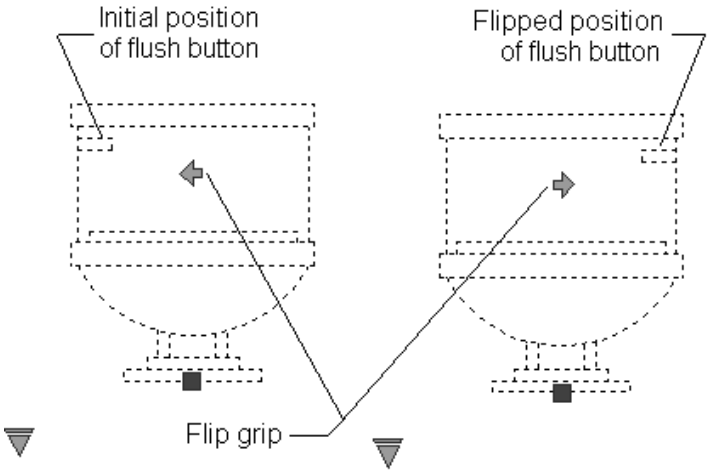

Figure 14-17 *Manipulation of the block using the* ***Flip*** *grip*

Alignment Grip

The **Alignment** grip is used to align the entire dynamic block with the other entities in the drawing. The alignment is defined using the base point of the alignment, at which the dynamic block grip is created. The block is rotated and moved while aligning.

Lookup Grip

The **Lookup** grip is used to view the different visibility states of a block. Click on the **Lookup** grip to display a shortcut menu. This shortcut menu contains all visibility states of the block. Select the visibility state that you want should be displayed on screen. Take a look at Figure 14-18, the different visibility states of Hex Socket Bolt are listed in the shortcut menu. In Figure 14-18(A)

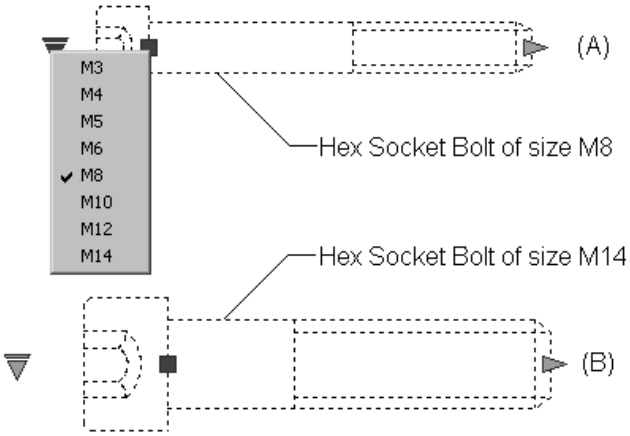

Figure 14-18 *Manipulation of the block using the* ***Lookup*** *grip*

the size of the bolt is M8, After selecting M14 from the shortcut menu, the size of the bolt that is being displayed on the graphics window becomes M14.

LAYERS, COLORS, LINETYPES, AND LINEWEIGHTS FOR BLOCKS

A block possesses the properties of the layer on which it is drawn. The block may be composed of objects drawn on several different layers, with different colors, linetypes, and lineweights. All this information is preserved in the block. At the time of insertion, each object in the block is drawn on its original layer with the original linetype, lineweight, and color, irrespective of the current drawing layer, object color, object linetype, and object lineweights. You may want all instances of a block to have identical layers, linetype properties, lineweight, and color. This can be achieved by allocating all the properties explicitly to the objects forming the block. On the other hand, if you want the linetype and color of each instance of a block to be set according to the linetype and color of the layer on which it is inserted, draw all the objects forming the block on layer 0 and set the color, lineweight, and linetype to BYLAYER. Objects with a BYLAYER color, linetype, and lineweight can have their colors, linetypes, and lineweights changed after insertion by changing the layer settings. If you want the linetype, lineweight, and color of each instance of a block to be set according to the current explicit linetype, lineweight, and color at the time of insertion, set the color, lineweight, and linetype of its objects to BYBLOCK. You can use the **PROPERTIES**, **CHPROP,** or **CHANGE** command to change some of the characteristics associated with a block (such as layer).

Note

The block is inserted on the layer that is current, but the objects comprising the block are drawn on the layers on which they were drawn when the block was being defined.

For example, assume block B1 includes a square and a triangle that were originally drawn on layer X and layer Y, respectively. Let the color assigned to layer X be red and to layer Y be green. Also, let the linetype assigned to layer X be continuous and for layer Y be hidden. Now, if we insert B1 on layer L1 with color yellow and linetype dot, block B1 will be on layer L1, but the square will be drawn on layer X with color red and linetype continuous, and the triangle will be drawn on layer Y with color green and linetype hidden.

The **BYLAYER** option instructs AutoCAD LT to assign objects within the block the color and linetype of the layers on which they were created. There are three exceptions:

1. If objects are drawn on a special layer (layer 0), they are inserted on the current layer. These objects assume the characteristics of the current layer (the layer on which the block is inserted) at the time of insertion, and can be modified after insertion by changing that layer's settings.

2. Objects created with the special color BYBLOCK are generated with the color that is current at the time of insertion of the block. This color may be explicit or BYLAYER. You are thus allowed to construct blocks that assume the current object color.

3. Objects created with the special linetype BYBLOCK are generated with the linetype that is

prevalent at the time the block is inserted. Blocks are thus constructed with the current object linetype, which may be BYLAYER or explicit.

Note

If a block is created on a layer that is frozen at the time of insertion, it is not shown on the screen.

Tip

If you are providing drawing files to others for their use, using only the BYLAYER settings provide the greatest compatibility with varying office standards for layer/color/linetype/lineweight, because they can be changed more easily after insertion.

NESTING OF BLOCKS

The concept of having one block within another block is known as the **nesting of blocks**. For example, you can insert several blocks by selecting them and then with the **BLOCK** command, create another block. Similarly, if you use the **INSERT** command to insert a drawing that contains several blocks into the current drawing, it creates a block containing nested blocks in the current drawing. There is no limit to the degree of nesting. The only limitation in nesting of blocks is that blocks that reference themselves cannot be inserted. The nested blocks must have different block names. Nesting of blocks affects layers, colors, and linetypes. The general rule is as follows.

If an inner block has objects on layer 0, or objects with linetype or color BYBLOCK, these objects may be said to behave like fluids. They "float up" through the nested block structure until they find an outer block with fixed color, layer, or linetype. These objects then assume the characteristics of the fixed layer. If a fixed layer is not found in the outer blocks, then the objects with color or linetype BYBLOCK are formed; that is, they assume the color white and the linetype CONTINUOUS.

Example 2 *General*

To make the concept of nested blocks clear, consider the following example.

1. Draw a rectangle on layer 0, and form a block of it named X.
2. Change the current layer to OBJ, and set its color to red and linetype to hidden.
3. Draw a circle on OBJ layer.
4. Insert the block X in the OBJ layer.
5. Combine the circle with the block X (rectangle) to form a block Y.
6. Now, insert block Y in any layer (say, layer CEN) with color green and linetype continuous.

You will notice that block Y is generated in color red and linetype hidden. Normally, block X, which is nested in block Y and created on layer 0, should have been generated in the color (green) and linetype (continuous) of the layer CEN. This is because the object (rectangle) on layer 0 floated up through the nested block structure and assumed the color and linetype of the first outer block (Y) with a fixed color (red), layer (OBJ), and linetype (hidden). If both the blocks (X and Y) were on layer 0, the objects in block Y would assume the color and linetype of the layer on which the block was inserted.

Example 3 *General*

1. Change the color of layer 0 to red.
2. Draw a circle and form a block of it, B1, with color BYBLOCK. It appears white because the color is set to BYBLOCK (Figure 14-19).
3. Set the color to BYLAYER and draw a square. The color of the rectangle is red.
4. Insert block B1. Notice that the block B1 (circle) assumes red color.
5. Create another block B2 consisting of Block B1 (circle) and rectangle.
6. Create a layer L1 with green color and hidden linetype. Insert block B2 in layer L1.
7. Explode block B2. Notice the change.
8. Explode block B1, circle. You will notice that the circle changes to white because it was drawn with the color set to BYBLOCK.

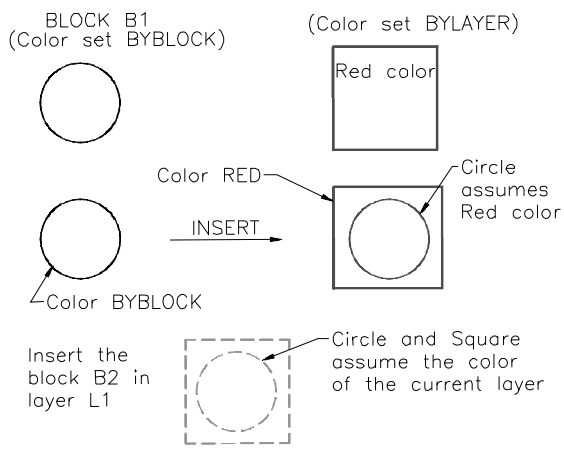

Figure 14-19 *Blocks versus layers and colors*

Exercise 4 *General*

Part A

1. Draw a unit square on layer 0 and make it a block named B1.
2. Make a circle with radius 0.5 and change it into block B2.
3. Insert block B1 into a drawing with an X scale factor of 3 and a Y scale factor of 4.
4. Now, insert the block B2 in the drawing and position it at the top of B1.
5. Make a block of the entire drawing and name it PLATE.
6. Insert the block Plate in the current layer.
7. Create a new layer with different colors and linetypes and insert blocks B1, B2, and Plate.

Keep in mind the layers on which the individual blocks and the inserted block were made.

Part B

Try nesting the blocks drawn on different layers and with different linetypes.

Part C
Change the layers and colors of the different blocks you have drawn so far.

CREATING DRAWING FILES USING THE WRITE BLOCK DIALOG BOX

Command: WBLOCK

The blocks or symbols created by the **BLOCK** command can be used only in the drawing in which they were created. This is a shortcoming because you may need to use a particular block in different drawings. The **WBLOCK** command is used to export symbols by writing them to new drawing files that can then be inserted in any drawing. With the **WBLOCK** command, you can create a drawing file (*.dwg* extension) of specified blocks, selected objects in the current drawing, or the entire drawing. All the used named objects (linetypes, layers, styles, and system variables) of the current drawing are inherited by the new drawing created with the **WBLOCK** command. This block can then be inserted in any drawing.

When the **WBLOCK** command is invoked, the **Write Block** dialog box is displayed (Figure 14-20). This dialog box converts blocks into drawing files and also saves objects as drawing files. You can also save the entire current drawing as a new drawing file.

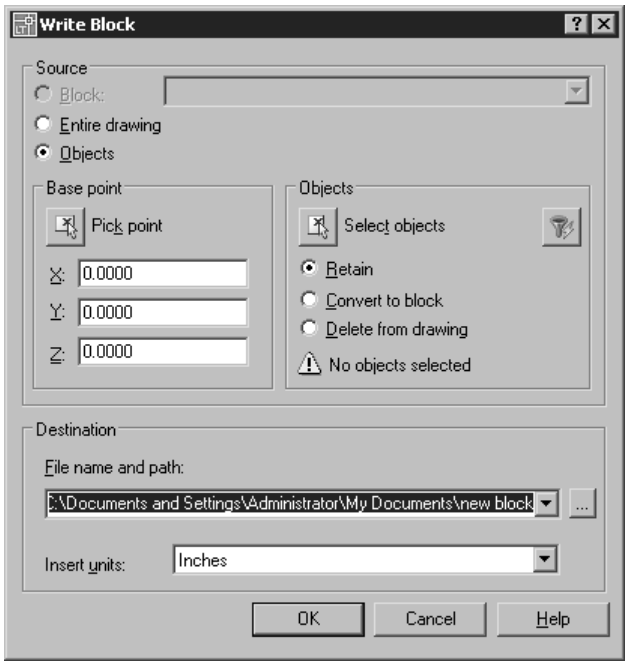

Figure 14-20 *The* ***Write Block*** *dialog box*

The **Write Block** dialog box has two main areas: **Source** and **Destination**. The **Source** area allows you to select objects and blocks, specify insertion base points and convert them into drawing files. In this area of the dialog box, depending on the selection you make, different

default settings are displayed. By default, the **Objects** radio button is shown as selected and in the **Destination** area, the **File name and path** edit box displays *new block.dwg* as the new file name and its location. The **Block** drop-down list is also not available. Now, you can select objects in a drawing and save them as a wblock, and can enter a name and a path for the file. If the current drawing consists of blocks and if you want to save a block as a wblock, you can select the **Block** radio button which is available. When the **Block** radio button is selected, the **Block** drop-down list is available. The **Block** drop-down list displays all the block names in the current drawing and you can select a name of the block that you want to convert into a wblock. The **Base point** and **Objects** areas are not available, since the insertion points and objects have already been saved with the block definition. Also, you will notice that in the **Destination** area, the **File name and path** edit box displays the name of the selected block by default. This means that you can keep the name of the wblock the same as the selected block or you can change the name if you want to. Selecting the **Entire drawing** radio button selects the current drawing as a block and saves it as a new file. When you use this option, the **Base point** and **Objects** areas are not available.

The **Base point** area allows you to specify the base point of a wblock, which it uses as an insertion point. You can either enter values in the **X**, **Y**, and **Z** edit boxes or choose the **Pick point** button to select it on the screen. The default value is 0,0,0. The **Objects** area allows you to select objects to save as a file. You can use the **Select objects** button to select objects or use the **QuickSelect** button to set parameters in the **Quick Select** dialog box to select objects in the current drawing. The number of objects selected is displayed at the bottom of the **Objects** area. If the **Retain** radio button is selected in the **Objects** area, the selected objects in the current drawing are kept as such after they have been saved as a new file. If the **Convert to block** radio button is selected, the selected objects in the current drawing are converted into a block with the same name as the new file after being saved as a new file. Selecting the **Delete** radio button deletes the selected objects from the current drawing after they have been saved as a file.

Note

*Both the **Base point** and **Objects** areas are available in the **Write Block** dialog box only when the **Objects** radio button is selected in the **Source** area of the dialog box.*

The **Destination** area sets the File name, location, and units of the new file in which the selected objects are saved. In the **File name and path** edit box you can specify the file name and the path of the block or the selected objects. You can choose the **[...]** button to display the **Browse for folder** window, where you can specify a path for where the new file will be saved. From the **Insert Units** drop-down list, you can select the units the new file will use when inserted as a block. The settings for units are stored in the **INSUNITS** system variable and the default option Inches has a value of 1. On specifying the required information in the dialog box, choose **OK**. The objects or the block is saved as a new file in the path specified by you. A **WBLOCK Preview** window with the new file contents is displayed. This preview image is stored and displayed in the DESIGNCENTER, when using it to insert drawings and blocks.

Note

Whenever a drawing is inserted into a current drawing, it acts as a single object. It cannot be edited unless exploded.

Tip

*Using the **Entire drawing** radio button in the **Write Block** dialog box to save the current drawing as a new drawing is a good way to reduce the drawing file size, since all unused blocks, layers, linetypes, text styles, dimension styles, multiline styles, shapes, and so on are removed from the drawing. The new drawing does not contain any information that is no longer needed. This **Entire drawing** option is faster than the **-PURGE** command (which also removes unused named objects from a drawing file) and can be used whenever you have completed a drawing and want to save it. The **-PURGE** command has been discussed later in this chapter.*

CREATING DRAWING FILES USING THE COMMAND LINE

The **-WBLOCK** command can be used to create drawing files when you want to use the command line. When this command is invoked, AutoCAD LT displays the **Create Drawing File** dialog box, except when the system variable **FILEDIA** is set to 0. This dialog box displays a list of all the drawing files in the current directory. Enter the name of the output drawing file in the **File name** edit box and then choose the **Save** button. If the file name you specify is identical to some other file in the same directory path, AutoCAD LT displays a message saying that a file with the same name already exists and asks if you want to replace it. After choosing the **Save** button, the dialog box is cleared from the screen, and AutoCAD LT issues the following prompt asking you for the name of an existing block that you want to convert into a permanent symbol.

Enter name of existing block or
[= (block=output file)/* (whole drawing)] <define new drawing>: *Enter the name of a predefined block.*

The drawing file with the name specified in the dialog box is created from the predefined block.

If you want to assign the same name to the output drawing file as that of the existing block, enter an (=) equal sign as a response to the **Enter name of existing block** prompt and enter the same file name in the **File name** edit box of the **Create Drawing File** dialog box. If a block by the name you have already assigned to the output file does not exist in the current drawing, AutoCAD LT gives an appropriate message that no block by that name exists in the current drawing, and the **Enter name of existing block or** prompt is repeated. This option is the same as the **Block** option of the **WBLOCK** command.

If you have not yet created a block, but want to create an output drawing file of the objects in the current drawing, press ENTER at the **Enter name of existing block** prompt. You are then required to select an insertion point and select the objects to be incorporated in the drawing file. This option is the same as the **Objects** option of the **WBLOCK** command.

You can also store an entire drawing as a wblock. In other words, the current file is copied into a new one specified in the **File name** edit box. To do so, respond to the prompt **Enter name of existing block** with an asterisk (*). The entire drawing is saved in the file in the directory you have specified. This option is the same as the **Entire drawing** option of the **WBLOCK** command.

Export Data Dialog Box

You can also use the **Export Data** dialog box (Figure 14-21) to create drawing files. This dialog box can be invoked by choosing **File > Export** from the menu bar or by entering **EXPORT** at the Command prompt. In this dialog box, you can select **Block (*.dwg)** from the **Save as type** drop-down list, enter the name of the drawing file in the **File name** edit box, and then choose the **Save** button. The dialog box is cleared from the screen and AutoCAD LT issues the same prompts as the **-WBLOCK** command discussed earlier.

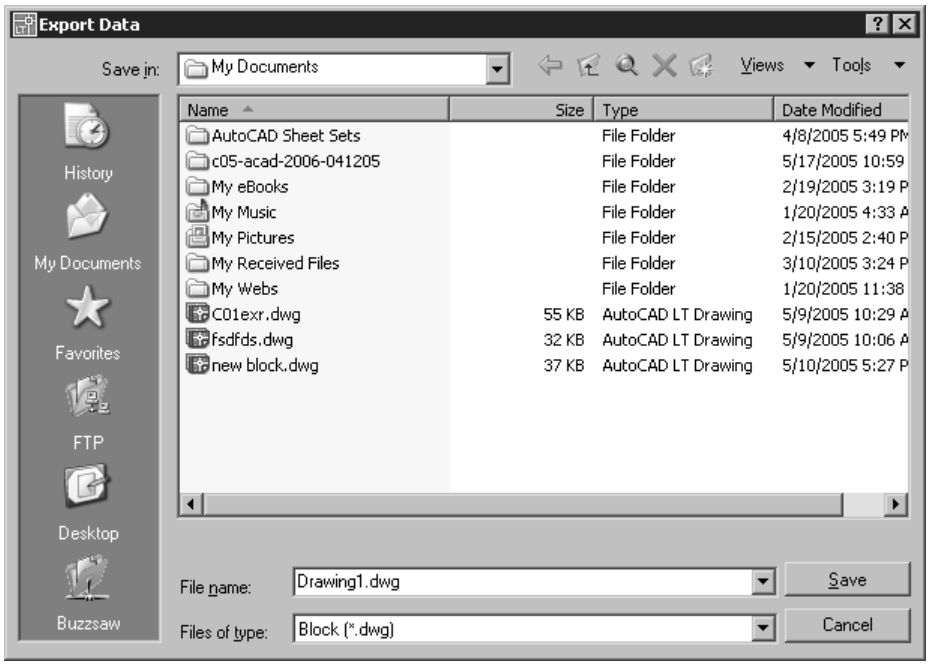

Figure 14-21 *The* ***Export Data*** *dialog box*

DEFINING THE INSERTION BASE POINT

Menu:	Draw > Block > Base
Command:	BASE

The **BASE** command lets you set the insertion base point for a drawing just as you set the base insertion point using the **BLOCK** command. This base point is defined so that when you insert the drawing into some other drawing, the specified base point is placed on the insertion point. By default, the base point is at the origin (0,0,0). When a drawing is inserted on a current layer, it does not inherit the color, linetype, or thickness properties of the current layer. When you invoke the **BASE** command, the prompt sequence is given next.

> Enter base point <0.0000,0.0000,0.0000>: *Specify a base point or press ENTER to accept the default.*

Tip

You can insert a drawing that you want to refer to for checking dimensions or certain features into the current drawing for reference. Then later you can use the ***UNDO*** *command to delete the inserted drawing. This way you can save stationery and time spent in printing.*

Note

Drawings inserted into a current drawing become part of the current drawing and increase the file size. Also, when the drawing is modified it does not get updated in the drawing; it has been inserted automatically. Hence, it is better to xref a drawing into the current drawing instead. External references is discussed in Chapter 16, Understanding External References.

Exercise 5

General

a. Create a drawing file named CHAIR using the **WBLOCK** command. Get a listing of your *.dwg* files and make sure that *CHAIR.dwg* is listed. Quit the drawing editor.
b. Begin a new drawing and insert the drawing file into the drawing. Save the drawing.

Breaking Up a Block

A block may be composed of different basic objects such as lines, arcs, polylines, and circles. All these objects are grouped together in the block and are treated as a single object. To edit any particular object of a block, the block needs to be "exploded," or split into independent parts. This is especially useful when an entire view or drawing has been inserted and a small detail needs to be corrected. This can be done in the following ways.

Selecting the Explode Check Box in the Insert Dialog Box

As discussed earlier, individual objects within a block cannot be edited unless the block is broken up (exploded). You can explode a block at the time of insertion by simply selecting the **Explode** check box before you choose **OK** in the **Insert** dialog box. Now, when the block is inserted, it would have been already exploded into its component objects.

Entering * as the Prefix of Block Name

To insert a block as a collection of individual objects (exploded), you can also enter an asterisk before its name, when using the command line. The prompt sequence for exploding the block BLOCKPLAN while inserting is given next.

Command: **-INSERT**
Enter block name or [?] <current>: ***BLOCKPLAN**
Specify insertion point or [Scale/X/Y/Z/Rotate/PScale/PX/PY/PZ/PRotate]: *Select the insertion point*.
Scale factor <1>: Enter
Specify rotation angle <0>: Enter

The inserted object will no longer be treated as a block. The figure consists of various objects that can be edited separately.

Note
Blocks with different X, Y, and Z values or nonuniformly scaled blocks can also be exploded. This was not possible in releases prior to the Release 13 of AutoCAD LT.

Using the EXPLODE Command

Toolbar:	Modify > Explode
Menu:	Modify > Explode
Command:	EXPLODE

As mentioned earlier, the other method to break a block into individual objects is by using the **EXPLODE** command (Figure 14-22). When you invoke the **EXPLODE** command you are prompted to select the block you want to explode.

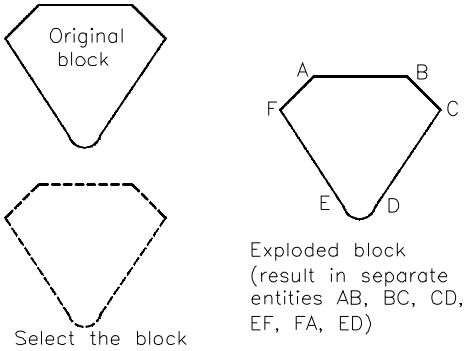

Figure 14-22 *Using the* ***EXPLODE*** *command*

Once you have selected the block you want to explode, press ENTER. The **EXPLODE** command explodes a block into its component objects regardless of the scale factors. It also does not have control over the properties such as layer, linetype, lineweight, and color of the component objects. When a block is exploded, there may be no visible change in the drawing. The drawing is identical except that the color and linetype may have changed because of floating layers, colors, or linetypes. The exploded block is now a group of objects that can be edited individually. To check whether the breaking of the block has taken place, select any object that was formerly a part of the block; only that particular object should be highlighted. After a block is exploded, the block definition continues to be in the block symbol table. After exploding a block you can modify it and then redefine it by using the **BLOCK** command. The **Block Definition** dialog box is displayed where you can select the name of the block you wish to redefine from the **Name** drop-down list. Then, use the dialog box options and redefine it. You can also use the **-BLOCK** command to redefine a block. Once you redefine a block, it automatically gets updated in the current drawing and for future use.

Note
Blocks inserted with External references cannot be exploded.

When redefining a block if you do not explode the block into its components prior to redefining, a warning message saying that the particular block references themselves are displayed by AutoCAD LT.

Using the XPLODE Command

Command:	XPLODE

With the **XPLODE** command, you can explode a block or blocks into component objects and simultaneously control their properties such as layer, linetype, color, and lineweight. The scale factor of the object to be exploded should be equal. Note that if the scale factor of the objects to

be exploded is not equal, you need to change the value of the **EXPLMODE** system variable to 1. The command prompts are as follows.

Command: **XPLODE**
Select objects to XPlode
Select objects: Use *any object selection method and select objects and then press ENTER*.

On pressing ENTER, AutoCAD LT reports the total number of objects selected and also the number of objects that cannot be exploded. If you select multiple object to be exploded, AutoCAD LT further prompts you to specify whether the changes in the properties of the component objects should be made individually or globally. The prompt is given next.

XPlode Individually/<Globally>: *Enter i, g, or press ENTER to accept the default option.*

If you enter **i** at the above prompt, AutoCAD LT will modify each object individually, one at a time. The next prompt is given next.

Enter an option [All/Color/LAyer/LType/LWeight/Inherit from parent block/Explode] <Explode>: *Select an option.*

All the options available are discussed next.

All. This option sets all the properties such as color, layer, linetype, and lineweight of the selected objects after exploding them. AutoCAD LT prompts you to enter new color, linetype, lineweight, and layer name for the exploded component objects.

Color. This option sets the color of the exploded objects. The prompt is given next.

New color [Truecolor/COlorbook]<BYLAYER>: *Enter a color option or press ENTER*.

When you enter BYLAYER, the component objects take on the color of the exploded object's layer and when you enter BYBLOCK, they take on the color of the exploded object.

Layer. This option sets the layer of the exploded objects. The default option is inheriting the current layer. The command prompt is as follows.

Enter new layer name for exploded objects <current>: *Enter an existing layer name or press ENTER.*

LType. This option sets the linetype of the components of the exploded object. The command prompt is given next.

Enter new linetype name for exploded objects <BYLAYER>: *Enter a linetype name or press ENTER to accept the default.*

LWeight. This option sets the lineweight of the components of the exploded object. The command prompt is given next.

Enter new lineweight <BYLAYER>: *Enter a lineweight or press ENTER to accept the default.*

Inherit from parent block. This option sets the properties of the component objects to that of the exploded parent object, provided the component objects are drawn on layer 0 and the color, lineweight, and linetype are BYBLOCK.

Explode. This option explodes the selected object exactly as in the **EXPLODE** command.

Selecting the **Globally** option, applies changes to all the selected objects at the same time and the options are similar to the ones discussed in the **Individually** option.

Tip
*Using the **XPLODE** command is better than the **EXPLODE** command since it gives you an added advantage of determining the properties of the exploded components of the block.*

RENAMING BLOCKS

Menu:	Format > Rename
Command:	RENAME

Blocks can be renamed with the **RENAME** command. AutoCAD LT displays the **Rename** dialog box, see Figure 14-23. This dialog box allows you to modify the name of an existing block. In the **Rename** dialog box, the **Named Objects** list box displays the categories of object types that can be renamed, such as blocks, layers, dimension styles, linetypes, and text styles, UCSs, views, and viewports. You can rename all of these except layer 0 and continuous linetype. When you select **Blocks** from the **Named Objects** list, the **Items** list box displays all the block

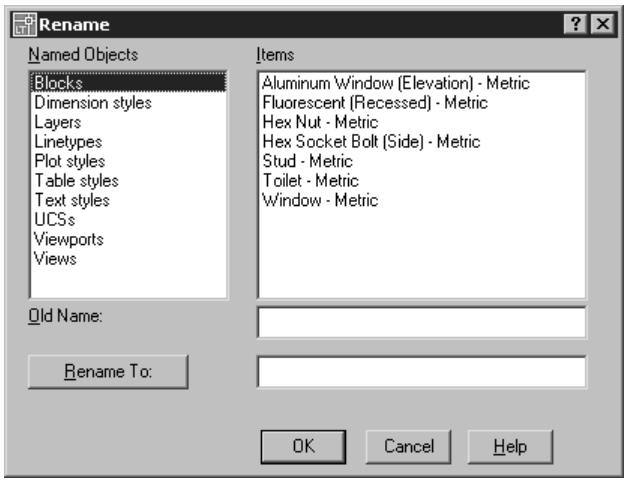

Figure 14-23 *The **Rename** dialog box*

names in the current drawing. When you select a block name you want to rename from the **Items** list box, it is displayed in the **Old Name** edit box. Enter the new name to be assigned to the block in the **Rename To** edit box. Choosing the **Rename To** button applies the change in name to the old name. Choose **OK** to exit the dialog box. For example, if you want to rename a block named Drawing1 to Drawing2, select Drawing1 from the Items list box. It is displayed in the **Old Name** edit box. Enter Drawing2 in the **Rename To** edit box and choose the **Rename To** button. Drawing2 appears in the **Items** list box. Now, choose **OK** to exit the dialog box.

Note

*The layer 0 and Continuous linetype cannot be renamed and therefore do not appear in the **Items** list box, when Layers and Linetypes are selected in the named **Objects** list box.*

*You can also rename a block using the command line, if you enter **-RENAME** at the Command prompt.*

DELETING UNUSED BLOCKS

Sometimes after completing a drawing, you may notice that the drawing contains several named objects, such as dimstyles, textstyles, layers, blocks, and so on that are not being used. Since these unused named objects unnecessarily occupy disk space, you may want to remove them. Unused blocks can be deleted with the **-PURGE** command. For example, if you want to delete an unused block named Drawing2, the prompt sequence is given next.

Command: **-PURGE**
Enter type of unused objects to purge
[Blocks/Dimstyles/LAyers/LTypes/Plotstyles/SHapes/textSTyles/Mlinestyles/Tablestyles/Regapps/All]: **B**
Enter names to purge <*>: **Drawing2**
Verify each name to be purged? [Yes/No] <Y>: Enter
Purge block "Drawing2"? <N>: **Y**

If there are no objects to remove, AutoCAD LT displays a message that there are no unreferenced objects to be purged.

Note

*The unused blocks can also be deleted using the **PURGE** command discussed in Chapter 18 (Object Grouping and Editing Commands)*

*Preceding the name of the wblock with an (*) asterisk when entering the name of the wblock while using the **-WBLOCK** command, or selecting the **Entire drawing** radio button in the **Write Drawing** dialog box when creating a wblock using the **WBLOCK** command has the same effect as using the **-PURGE** command. But, the **WBLOCK** command is faster and deletes the unused named objects automatically, while the **-PURGE** command allows you to select the type of named objects you want to delete, and it also gives you an option to verify the objects before deletion occurs.*

Self-Evaluation Test

Answer the following questions, and then compare your answers to those given at the end of this chapter.

1. Individual objects in a block can be erased. (T/F)

2. A block can be mirrored by providing a scale factor of -1 for X. (T/F)

3. Blocks created by the **BLOCK** command can be used in any drawing. (T/F)

4. An existing block cannot be redefined. (T/F)

5. The _____ command lets you create a drawing file (*.dwg* extension) of a block defined in the current drawing. (T/F)

6. The _____ command can be used to change the name of a drawing file. (T/F)

7. The _____ command is used to place a previously created block in a drawing.

8. You can delete unreferenced blocks with the _____ command.

9. You can use the _____ to locate, preview, copy, and insert blocks or existing drawings into the current drawing.

10. The _____ window is displayed by pressing CTRL+3 and can be used to insert the predefined blocks in the current drawing.

Review Questions

Answer the following questions.

1. An entire drawing can be converted into a block. (T/F)

2. The objects in a block possess the properties of the layer on which they are drawn, such as color and linetype. (T/F)

3. If the objects forming a block were drawn on layer 0 with color and linetype BYLAYER, then at the time of the insertion, each object that makes up a block is drawn on the current layer with the current linetype and color. (T/F)

4. Objects created with the special color BYBLOCK are generated with the color that is current at the time the block was inserted. (T/F)

5. Blocks inserted using the TOOL PALETTES can be manipulated dynamically. (T/F)

6. The block name is controlled by which system variable?

   (a) **EXTNAMES** (b) **EXTMIN**
   (c) **EXTMAX** (d) **SAVENAME**

7. Which command should you use if you want to get back the objects that consist of the block and have been removed from the drawing?

   (a) **OOPS** (b) **BLIPS**
   (c) **BLOCK** (d) **UNDO**

8. By what amount is a block rotated if the values of both the X and Y scale factors is -1?

   (a) 90 (b) 180
   (c) 270 (d) 360

9. When you insert a drawing into a current drawing, how many of the blocks belonging to the inserted drawing are brought into the current drawing?

   (a) One (b) None
   (c) All (d) Two

10. What command is used to create a rectangular array of a block?

    (a) **ARRAY** (b) **INSERT**
    (c) **MINSERT** (d) **3DARRAY**

11. **The WBLOCK**-asterisk method or the **Entire drawing** option of the **WBLOCK** command have the same effect as the **PURGE** command. The only difference is that with the **PURGE** command, _____.

12. Using the _____ command has the added advantage of being able to control the properties of the exploded components of the block, besides being able to break up the block into its component objects.

13. The Automatic Save feature is _____ during in-place reference editing.

14. The blocks created inside a square of one unit are called _____.

15. The Layer 0 and the Continuous linetype _____ be renamed using the **RENAME** command.

Exercises

Exercise 6

General

Draw part (a) of Figure 14-24 and define it as a block named A. Then, using the block insert command, insert the block in the plate as shown.

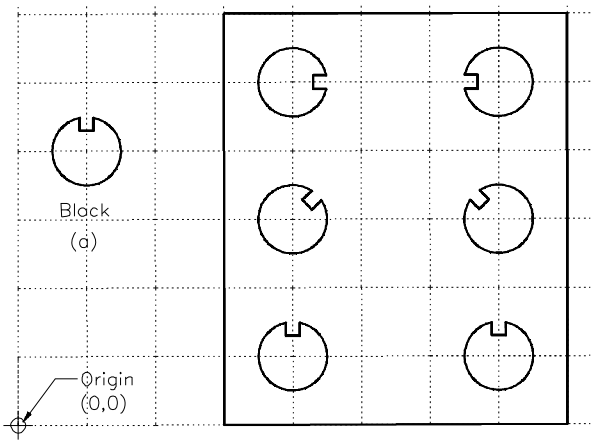

Figure 14-24 *Drawing for Exercise 7*

Exercise 7

Mechanical

Draw the diagrams in Figure 14-25 using blocks.
a. Create a block for the valve, Figure 14-25(a).
b. Use a thick polyline for the flow lines.

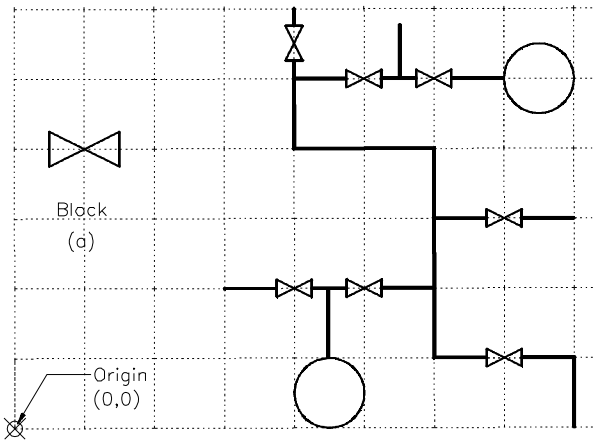

Figure 14-25 *Drawing for Exercise 8*

Exercise 8 *Piping*

Draw part (a) of Figure 14-26 and define it as a block named B. Then, using the relevant insertion method, generate the pattern as shown. Note that the pattern is rotated at 30-degree.

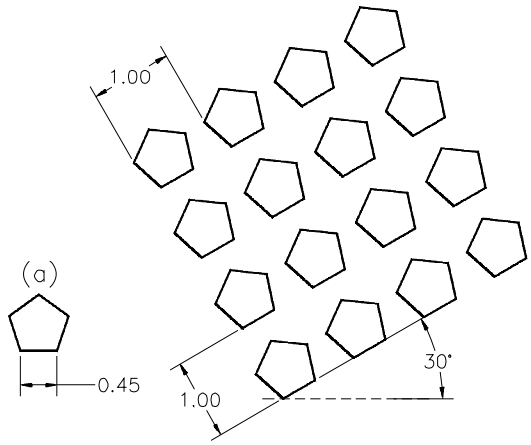

Figure 14-26 *Drawing for Exercise 9*

Exercise 9 *General*

Draw part (a) of Figure 14-27 and define it as a block named Chair. The dimensions of the chair can be referred from the Problem Solving Exercise 3 of Chapter 5. Then, using the block insert command, insert the chair around the table as shown.

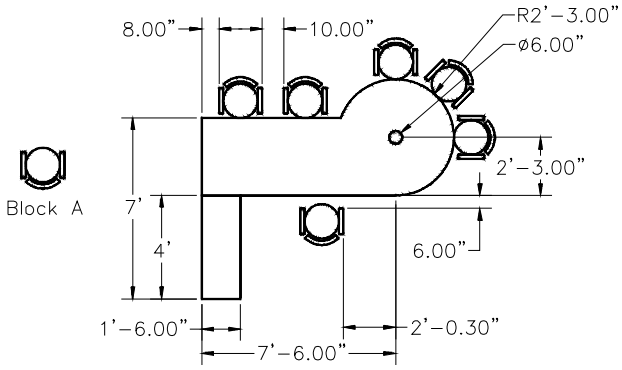

Figure 14-27 *Drawing for Exercise 10*

Answers to Self-Evaluation Test

1 - F, **2** - T, **3** - F, **4** - F, **5** - **WBLOCK**, **6** - **RENAME**, **7** - **INSERT**, **8** - **PURGE**, **9** - **DESIGNCENTER**, **10** - **TOOL PALETTES**

AutoCAD LT Part II

Author's Web sites

For Faculty: Please contact the author at **stickoo@calumet.purdue.edu** or **tickoo@cadcim.com** to access the Web site that contains the following:

1. **PowerPoint presentations, programs, and drawings used in this textbook.**
2. **Syllabus, chapter objectives and hints, and questions with answers for every chapter.**

For Students: You can download drawing-exercises, tutorials, programs, and special topics by accessing author's Web site at **www.cadcim.com** or **http://technology.calumet.purdue.edu/met/tickoo/students/students.htm**.