Chapter 21

Drawing and Viewing 3D Objects

Learning Objectives

After completing this chapter, you will be able to:

- *Understand the need of changing the viewpoint.*
- *Understand various 3D coordinate systems.*
- *Setting thickness and elevation for the new objects.*
- *Use the **HIDE** command.*
- *Understand regions and how to create them.*
- *Create 3D objects.*
- *Dynamically view 3D objects using the **DVIEW** command.*
- *Create shaded models.*
- *Analyze regions using the **MASSPROP** command.*
- *Modify the properties of the hidden lines.*

CHANGING THE VIEWPOINT TO VIEW 3D MODELS

Until now, you have drawn only the 2D entities in the *XY* plane and in the plan view. But in the plan view, it is very difficult to find out whether the object displayed is a 2D entity or a 3D model. For example, see Figure 21-1. In this view, it appears as though the object displayed is a rectangle. The reason for this is that by default you view the objects in the plan view from the direction of the positive *Z* axis. This is a very confusing situation that has to be avoided. This situation can be avoided if the object is viewed from a direction that also displays the *Z* axis. In order to do that, you need to change the viewpoint so that the object is displayed in the space with all three axes as shown in Figure 21-2. In this view you can also see the *Z* axis of the model along with the *X* and the *Y* axes and so it is clear that the original object is not a rectangle but is a 3D model. The viewpoint can be changed by the **DDVPOINT** command, the **VPOINT** command or using the **View** toolbar.

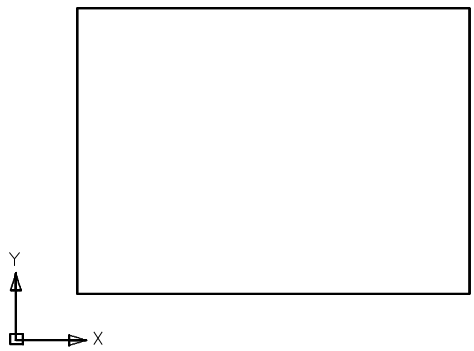

Figure 21-1 *Figure showing a rectangle in the Plan view*

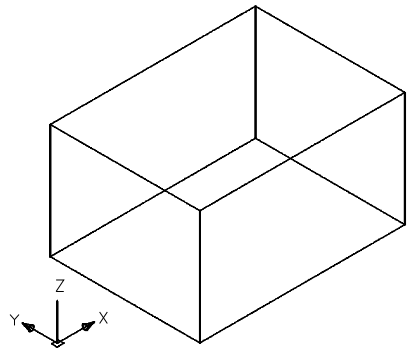

Figure 21-2 *Figure showing the 3D model after changing the viewpoint*

Tip

Bear in mind that changing the viewpoint does not affect the dimensions or the location of the model. When you change the viewpoint, the model is not moved from its original location. Changing the viewpoint only changes the direction from which you are viewing the model.

Changing the Viewpoint Using the Viewpoint Presets Dialog Box

Menu:	View > 3D Views > Viewpoint Presets
Command:	DDVPOINT

The **DDVPOINT** command is used to set the viewpoint to view the 3D models. The viewpoint in this command is set with respect to the **angle in the *XY* plane** and the **angle from the *XY* plane**. Figure 21-3 shows different view direction parameters.

When you invoke this command, the **Viewpoint Presets** dialog box will be displayed as shown in Figure 21-4.

© CADCIM Technologies, USA. For online training, contact sales@cadcim.com

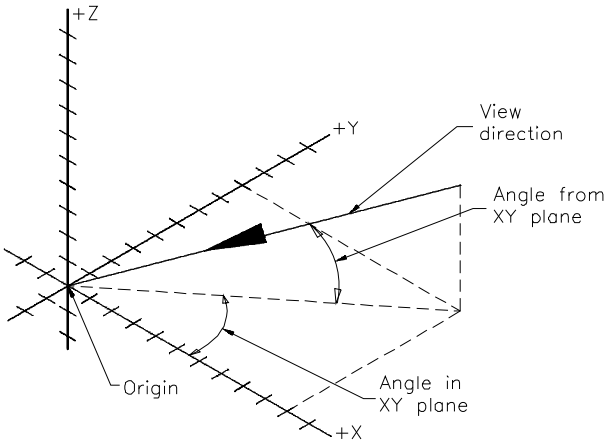

Figure 21-3 *Figure showing view direction parameters*

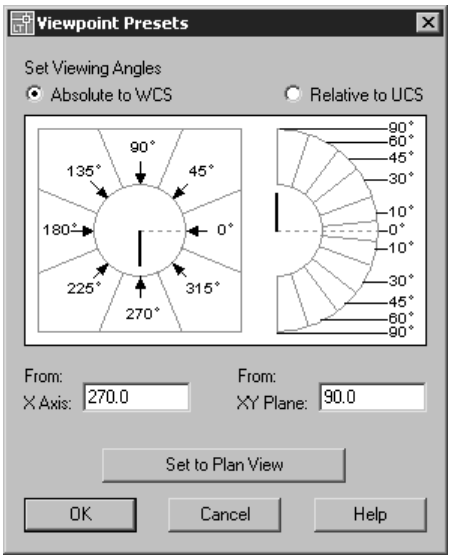

Figure 21-4 *The* ***Viewpoint Presets*** *dialog box*

Viewpoint Presets Dialog Box Options

Absolute to WCS. This radio button is selected to set the viewpoint with respect to the world coordinate system.

Relative to UCS. This radio button is selected to set the viewpoint with respect to the current user coordinate system.

Note

The WCS and the UCS were discussed in Chapter 20, The User Coordinate System.

© CADCIM Technologies, USA. For engineering services, contact sales@cadcim.com

From: X Axis. This edit box is used to specify the angle in the *XY* plane from the *X* axis. You can directly enter the required angle in this edit box or you can select the desired angle from the image tile (Figure 21-5). There are two arms in this image tile and by default, they are placed one over the other. The gray arm displays the current viewing angle and the black one displays the new viewing angle. When you select a new angle from the image tile, the new angle is automatically displayed in the **X Axis** edit box. This value can vary between 0 and 359.9.

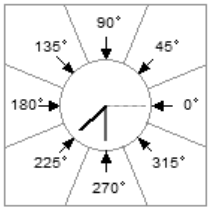

Figure 21-5 *Image tile for selecting the angle in the XY plane*

XY Plane. This edit box is used to specify the angle from the *XY* plane. You can directly enter the desired angle in this edit box, or can select the angle from the image tile as shown in Figure 21-6. This value can vary from -90 to +90.

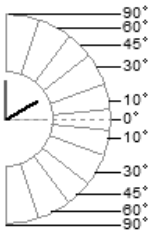

Figure 21-6 *Figure showing the image tile for selecting the angle from the XY plane*

Set to Plan View. This button is chosen to set the viewpoint to the plan view of the WCS or the UCS. If the **Absolute to WCS** radio button is selected, the viewpoint is set to the plan view of the WCS and if the **Relative to UCS** radio button is selected, the viewpoint is set to the plan view of the current UCS.

Figure 21-7 and Figure 21-8 shows a 3D model from different viewing angles. If you set a negative angle from the *XY* plane, then the *Z* axis will be displayed in the dotted line, see Figure 21-9 and Figure 21-10.

Note

In case of confusion in the direction of the X, Y, and Z axes, use the right-hand rule.

Changing the Viewpoint Using the Command Line

Menu:	View > 3D Views
Command:	VPOINT

The **VPOINT** command is also used to set the viewpoint for viewing the 3D models. This command allows the user to specify a point in the 3D space that will act as the viewpoint. The prompt sequence that will follow when you invoke this command is given next.

© CADCIM Technologies, USA. For online training, contact sales@cadcim.com

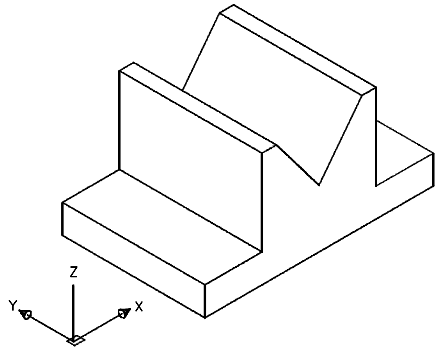

Figure 21-7 *Viewing the 3D model with the angle in the XY plane as 225 and angle from*

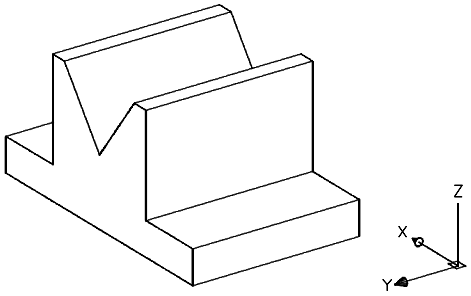

Figure 21-8 *Viewing the 3D model with the angle in the XY plane as 145 and angle from the XY*

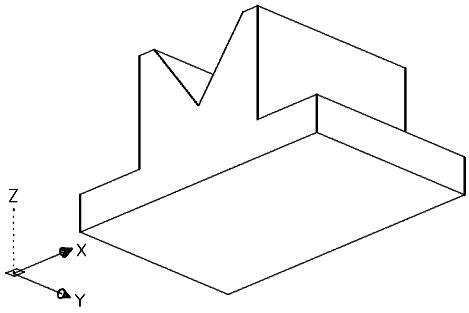

Figure 21-9 *Viewing the 3D model with the angle in the XY plane as 315 and angle from the XY plane as -25*

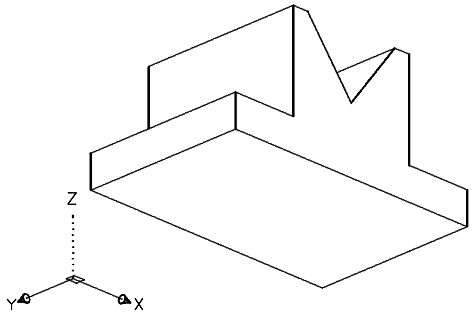

Figure 21-10 *Viewing the 3D model with the angle in the XY plane as 225 and angle from the XY plane as -25*

Current view direction: VIEWDIR=0.0000,0.0000,1.0000
Specify a view point or [Rotate] <display compass and tripod>:

Specifying a Viewpoint

This is the default option and is used to set a viewpoint by specifying the location of the viewpoint using the *X*, *Y*, and *Z* coordinates of that particular point. AutoCAD LT follows a conventions of the sides of the 3D model for specifying the viewpoint. The convention states that if the UCS is at the World position (default position), then

1. The side at the positive *X* axis direction will be taken as the right side of the model.
2. The side at the negative *X* axis direction will be taken as the left side of the model.
3. The side at the negative *Y* axis direction will be taken as the front side of the model.
4. The side at the positive *Y* axis direction will be taken as the back side of the model.
5. The side at the positive *Z* axis direction will be taken as the top side of the model.

© CADCIM Technologies, USA. For engineering services, contact sales@cadcim.com

6. The side at the negative *Z* axis direction will be taken as the bottom side of the model.

Some of the standard viewpoint coordinates and the view they display are shown below.

Vpoint Value	View Displayed
1,0,0	Right side view
-1,0,0	Left side view
0,1,0	Back view
0,-1,0	Front view
0,0,1	Top view
0,0,-1	Bottom view
1,1,1	Right, Back, Top view
-1,1,1	Left, Back, Top view
1,-1,1	Right, Front, Top view
-1,-1,1	Left, Front, Top view
1,1,-1	Right, Back, Bottom view
-1,1,-1	Left, Back, Bottom view
1,-1,-1	Right, Front, Bottom view
-1,-1,-1	Left, Front, Bottom view

Figures 21-11 through 21-14 show the 3D model from different viewpoints.

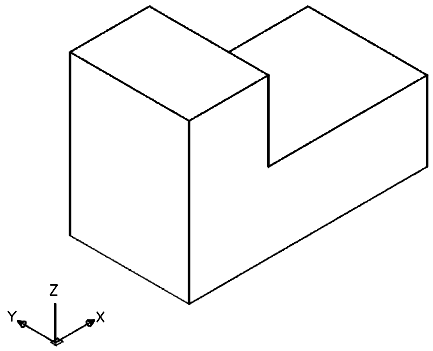

Figure 21-11 *Viewing the model with the viewpoint -1,-1,1*

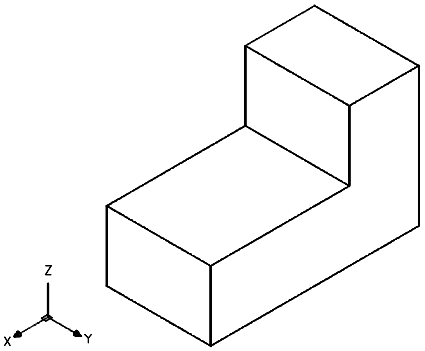

Figure 21-12 *Viewing the model with the viewpoint 1,1,1*

© CADCIM Technologies, USA. For online training, contact sales@cadcim.com

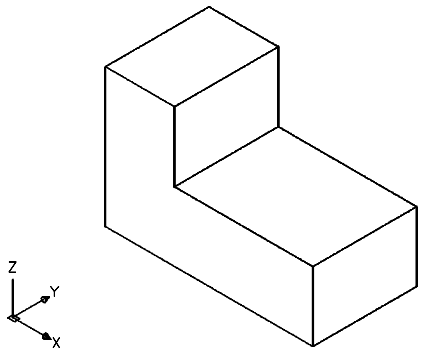

Figure 21-13 *Viewing the model with the viewpoint 1,-1,1*

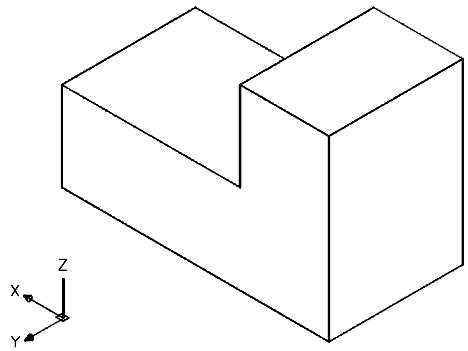

Figure 21-14 *Viewing the model with the viewpoint -1,1,1*

Compass and Tripod

When you press ENTER at the **Specify a view point or [Rotate] <display compass and tripod>** prompt, a compass and an axis tripod is displayed, as shown in Figure 21-15.

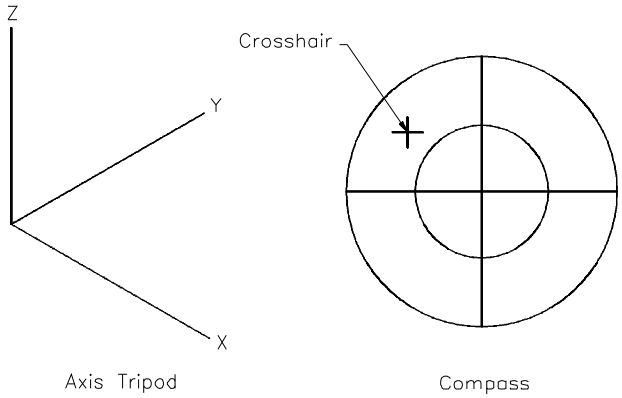

Figure 21-15 *The axis tripod and the compass*

You can directly set the viewpoint using this compass. A crosshair appears on the compass and you can pick any point on it to specify the viewpoint. The compass consists of two circles, a smaller circle and a bigger circle. Both these circles are divided into four quadrants: first, second, third, and fourth. The resultant view will depend upon the quadrant and the circle on which you pick the point. In the first quadrant, both the *X* and the *Y* axes are positive; in the second quadrant, the *X* axis is negative and the *Y* axis is positive; in third quadrant both the *X* and *Y* axes are negative; and in the fourth quadrant, the *X* axis is positive and the *Y* axis is negative. Now, if you pick the point inside the inner circle, it will be in the positive *Z* axis

© CADCIM Technologies, USA. For engineering services, contact sales@cadcim.com

direction and if you pick the point outside the inner circle and inside the outer circle, it will be in the negative *Z* axis direction. Therefore, if the previously mentioned statements are added, the following can be concluded.

1. If you pick a point inside the smaller circle in the first quadrant, the resultant view will be the Right, Back, Top view. If you pick a point out side the smaller circle and inside the bigger circle in this quadrant, the resultant view will be the Right, Back, Bottom view (Figure 21-16).

2. If you pick a point inside the smaller circle in the second quadrant, the resultant view will be the Left, Back, Top view. If you pick a point outside the smaller circle and inside the bigger circle in this quadrant, the resultant view will be the Left, Back, Bottom view (Figure 21-16).

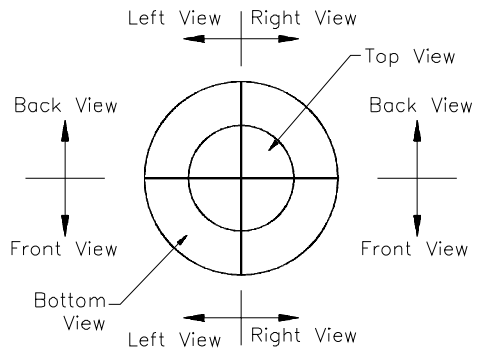

Figure 21-16 *Figures showing the directions for the compass*

3. If you pick a point inside the smaller circle in the third quadrant, the resultant view will be the Left, Front, Top view. If you pick a point outside the smaller circle and inside the bigger circle in this quadrant, the resultant view will be the Left, Front, Bottom view (Figure 21-16).

4. If you pick a point inside the smaller circle in the fourth quadrant, the resultant view will be the Right, Front, Top view. If you pick a point outside the smaller circle and inside the bigger circle in this quadrant, the resultant view will be the Right, Front, Bottom view (Figure 21-16).

Rotate

This option is similar to setting the viewpoint in the **Viewpoint Presets** dialog box displayed by invoking the **DDVPOINT** command. When you select this option, you will be prompted to specify the angle in the *XY* plane and the angle from the *XY* plane. The angle in the *XY* plane will be taken from the *X* axis.

Changing the Viewpoint Using the View Toolbar

Apart from the **DDVPOINT** and the **VPOINT** commands, you can also set the viewpoint using the **View** toolbar shown in Figure 21-17.

This toolbar consists of six preset orthographic views: Top View, Bottom View, Left View, Right View, Front View, and Back View. Apart from these orthographic views, this toolbar also has four preset isometric views: Southwest Isometric View, Southeast Isometric View, Northeast Isometric View, and Northwest Isometric View.

© CADCIM Technologies, USA. For online training, contact sales@cadcim.com

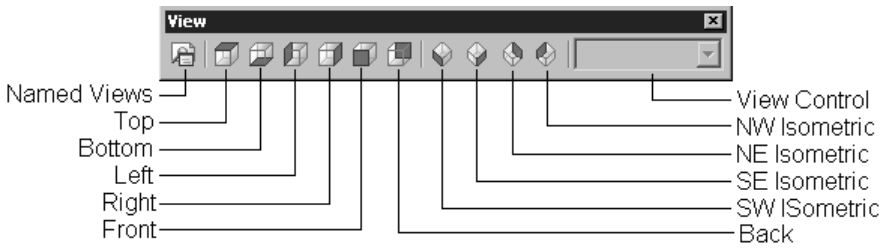

Figure 21-17 *The* ***View*** *toolbar*

Tip

When you choose any of the preset orthographic views from the ***View*** *toolbar, the UCS is also aligned to that view.*

3D COORDINATE SYSTEMS

Similar to the 2D coordinate systems, there are two main types of coordinate systems. They are as follows.

Absolute Coordinate System

This type of coordinate system is similar to the 2D absolute coordinate system in which the coordinates of the point are calculated from the origin (0,0). The only difference is that here along with the *X* and *Y* coordinates, the *Z* coordinates are also included. For example, if you want to draw a line in 3D space starting from the origin to a point say 10,6,6, the procedure to be followed is:

Command: **LINE**
Specify first point: **0,0,0**
Specify next point or [Undo]: **10,6,6**
Specify next point or [Undo]: Enter

Figure 21-18 shows a figure drawn using the absolute coordinate systems.

© CADCIM Technologies, USA. For engineering services, contact sales@cadcim.com

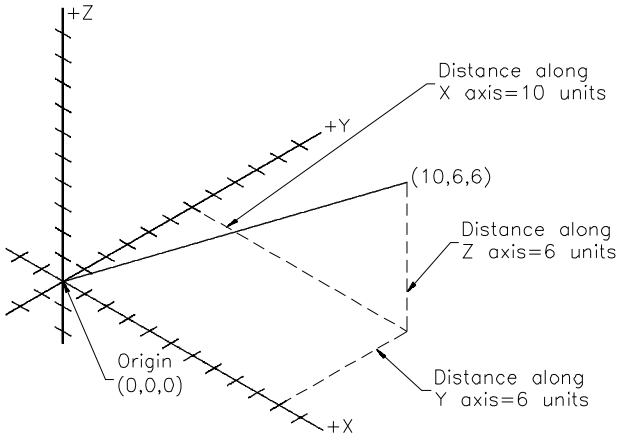

Figure 21-18 *Drawing a line from origin to 10,6,6*

Example 1

In this example, you will draw the 3D wireframe model shown in Figure 21-19.

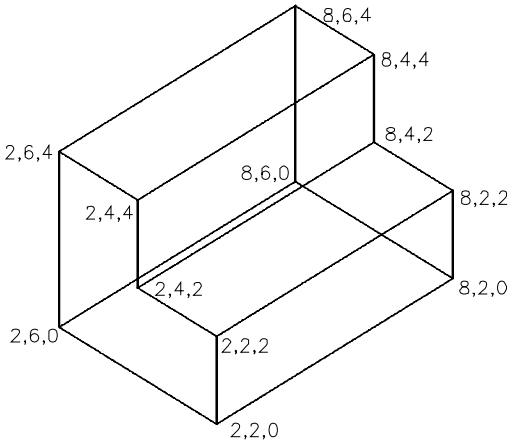

Figure 21-19 *3D model for Example 1*

1. Choose the **Line** button from the **Draw** toolbar. The prompt sequence is as follows.

   Specify first point: **2,2,0**
   Specify next point or [Undo]: **8,2,0**
   Specify next point or [Undo]: **8,6,0**
   Specify next point or [Close/Undo]: **2,6,0**
   Specify next point or [Close/Undo]: **C**

© CADCIM Technologies, USA. For online training, contact sales@cadcim.com

2. Choose **3D Views > Viewpoint Presets** from the **View** menu to display the **Viewpoint Presets** dialog box.

3. Set the value of the **X Axis** edit box to **225**.

4. Set the value of the **XY Plane** edit box to **38**, see Figure 21-20. Choose **OK**.
5. Choose the **Line** button from the **Draw** toolbar. The prompt sequence is as follows.

   Specify first point: **2,2,0**

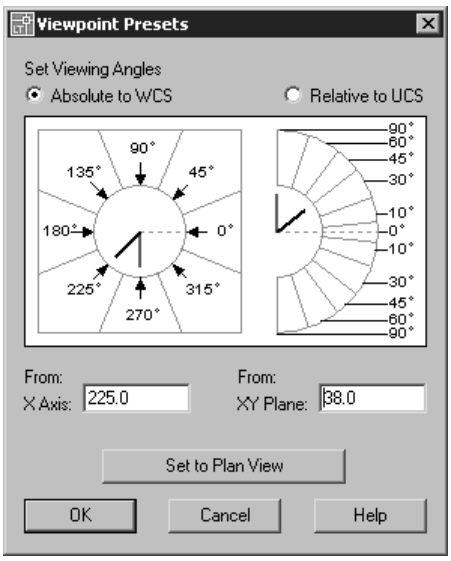

Figure 21-20 *The* ***Viewpoint Presets*** *dialog box*

   Specify next point or [Undo]: **2,2,2**
   Specify next point or [Undo]: **2,4,2**
   Specify next point or [Close/Undo]: **8,4,2**
   Specify next point or [Close/Undo]: **8,2,2**
   Specify next point or [Close/Undo]: **2,2,2**
   Specify next point or [Close/Undo]: Enter

6. Choose the **Line** button from the **Draw** toolbar. The prompt sequence is as follows.

   Specify first point: **2,4,2**
   Specify next point or [Undo]: **2,4,4**
   Specify next point or [Undo]: **2,6,4**
   Specify next point or [Close/Undo]: **2,6,0**
   Specify next point or [Close/Undo]: Enter

© CADCIM Technologies, USA. For engineering services, contact sales@cadcim.com

7. Choose **3D Views > Viewpoint Presets** from the **View** menu to display the **Viewpoint Presets** dialog box.

8. Set the value of the **X Axis** edit box to **335**.

9. Set the value of the **XY Plane** edit box to **35**. Choose **OK**.

10. Choose the **Line** button from the **Draw** toolbar. The prompt sequence is as follows.

    Specify first point: **8,2,0**
    Specify next point or [Undo]: **8,2,2**
    Specify next point or [Undo]: Enter

11. Choose the **Line** button from the **Draw** toolbar. The prompt sequence is as follows.

    Specify first point: **8,4,2**
    Specify next point or [Undo]: **8,4,4**
    Specify next point or [Undo]: **8,6,4**
    Specify next point or [Close/Undo]: **8,6,0**
    Specify next point or [Close/Undo]: Enter

12. Choose the **Line** button from the **Draw** toolbar. The prompt sequence is as follows.

    Specify first point: **8,6,4**
    Specify next point or [Undo]: **2,6,4**
    Specify next point or [Undo]: Enter

13. Choose the **Line** button from the **Draw** toolbar. The prompt sequence is as follows.

    Specify first point: **8,4,4**
    Specify next point or [Undo]: **2,4,4**
    Specify next point or [Undo]: Enter

14. Enter **VPOINT** at the Command prompt. The prompt sequence is as follows.

    Current view direction: VIEWDIR=0.7424,-0.3462,0.5736
    Specify a view point or [Rotate] <display compass and tripod>: **-1,-1,1**

15. The final model should look similar to the one shown in Figure 21-21.

© CADCIM Technologies, USA. For online training, contact sales@cadcim.com

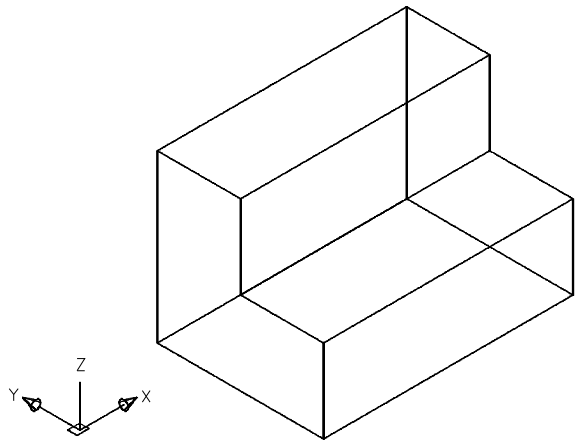

Figure 21-21 *Final 3D model for Example 1*

Relative Coordinate System

In the 3D, you are provided with three types of relative coordinate systems. They are as follows.

Relative Rectangular Coordinate System

This coordinate system is similar to the relative rectangular coordinate system, except that in 3D you have to enter the *Z* coordinate also along with the *X* and the *Y* coordinates. The syntax of the relative rectangular system for the 3D is **@X coordinate,Y coordinate, Z coordinate**.

Relative Cylindrical Coordinate System

In this type of coordinate system, you are allowed to locate the point by specifying its distance from the reference point, the angle in the *XY* plane, and its distance from the *XY* plane. The syntax of the relative cylindrical coordinate system is **@Distance from the reference point in the XY plane<Angle in the XY plane from the X axis, Distance from the XY plane along the Z axis**. Figure 21-22 shows various components of the relative cylindrical coordinate system.

Relative Spherical Coordinate System

In this type of coordinate system you are allowed to locate the point by specifying the distance of the point from the reference point, the angle in the *XY* plane, and the angle from the *XY* plane. The syntax of the relative spherical coordinate system is **@Length of the line from the reference point<Angle in the XY plane from the X axis<Angle from the XY plane**. Figure 21-23 shows various components involved in the relative spherical coordinate system.

Tip

The major difference between the relative cylindrical and relative spherical coordinate system is that in the relative cylindrical coordinate system, the distance you specify is the distance from the reference point in the XY plane, whereas in the relative spherical coordinate system, the distance you specify is the total length of the line in the 3D space.

© CADCIM Technologies, USA. For engineering services, contact sales@cadcim.com

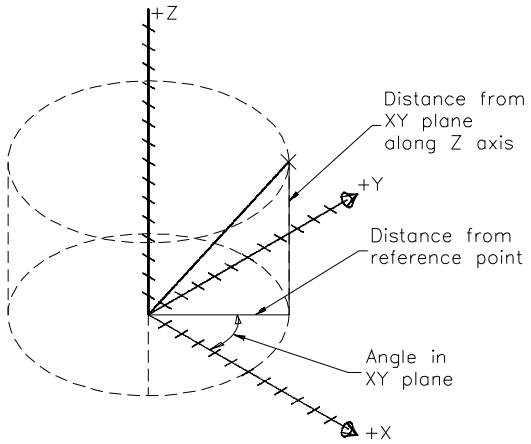

Figure 21-22 *Figure showing various components of the relative cylindrical coordinate system*

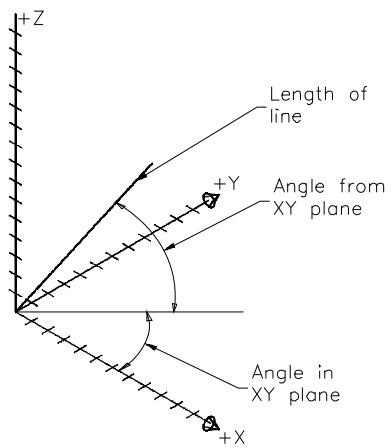

Figure 21-23 *Figure showing various components of the relative spherical coordinate system*

Example 2

In this example, you will draw the 3D wireframe model shown in Figure 21-24. The dimensions of the model are given in Figure 21-25 and Figure 21-26.

1. Choose the **SW Isometric View** button from the **View** toolbar to shift to the southwest isometric view.

2. As the start point of the model is not given, therefore, you can start the model from any point.

© CADCIM Technologies, USA. For online training, contact sales@cadcim.com

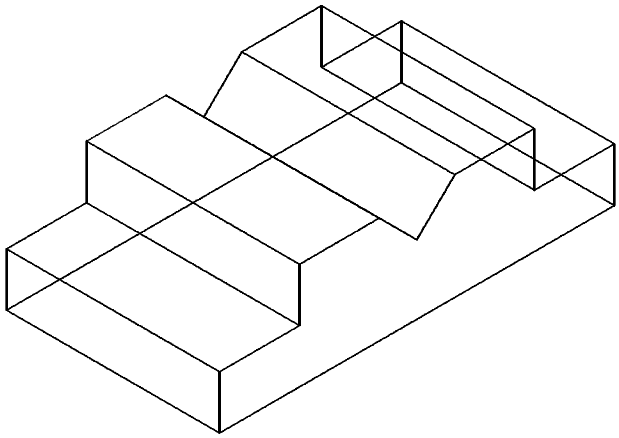

Figure 21-24 *Wireframe model for Example 2*

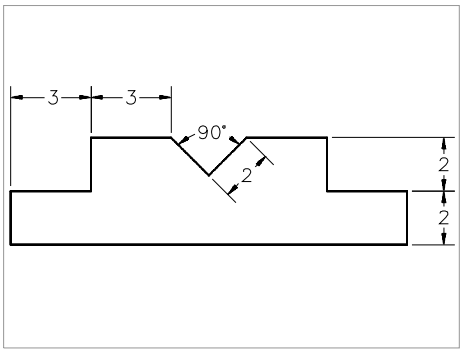

Figure 21-25 *Front view of the model*

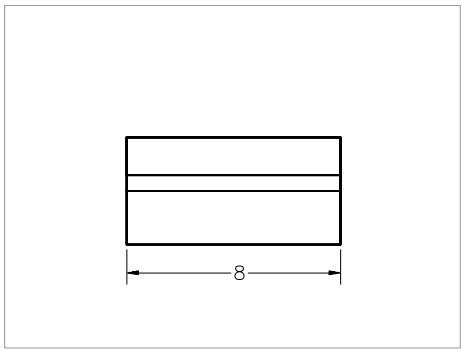

Figure 21-26 *Side view of the model*

Choose the **Line** button from the **Draw** toolbar to invoke the **LINE** command. The prompt sequence is as follows.

Specify first point: **4,2,0**
Specify next point or [Undo]: **@0,0,2**
Specify next point or [Undo]: **@3,0,0**
Specify next point or [Close/Undo]: **@0,0,2**
Specify next point or [Close/Undo]: **@3,0,0**
Specify next point or [Close/Undo]: **@2<0<315**
Specify next point or [Close/Undo]: **@2<0<45**
Specify next point or [Close/Undo]: **@3,0,0**
Specify next point or [Close/Undo]: **@0,0,-2**
Specify next point or [Close/Undo]: **@3,0,0**
Specify next point or [Close/Undo]: **@0,0,-2**
Specify next point or [Close/Undo]: **C**

© CADCIM Technologies, USA. For engineering services, contact sales@cadcim.com

3. Choose the **Line** button from the **Draw** toolbar. The prompt sequence is as follows.

Specify first point: **4,2,0**
Specify next point or [Undo]: **@0,8,0**
Specify next point or [Undo]: **@0,0,2**
Specify next point or [Close/Undo]: **@3,0,0**
Specify next point or [Close/Undo]: **@0,0,2**
Specify next point or [Close/Undo]: **@3,0,0**
Specify next point or [Close/Undo]: **@2<0<315**
Specify next point or [Close/Undo]: **@2<0<45**
Specify next point or [Close/Undo]: **@3,0,0**
Specify next point or [Close/Undo]: **@0,0,-2**
Specify next point or [Close/Undo]: **@3,0,0**
Specify next point or [Close/Undo]: **@0,0,-2**
Specify next point or [Close/Undo]: **@0,-8,0**
Specify next point or [Close/Undo]: Enter

4. Complete the model by joining the remaining edges using the **LINE** command.

5. The final 3D model should look similar to the one shown in Figure 21-27.

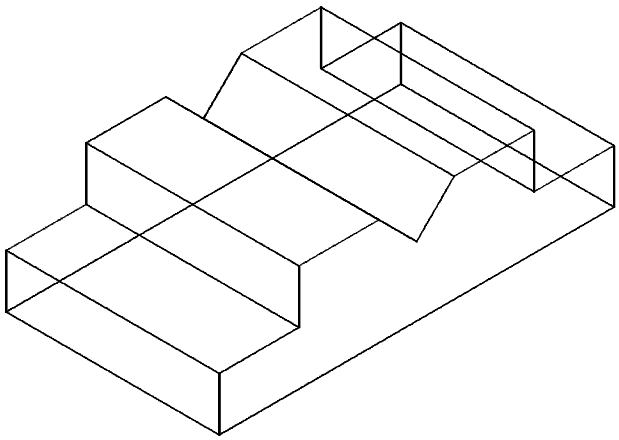

Figure 21-27 *Final 3D model for Example 2*

© CADCIM Technologies, USA. For online training, contact sales@cadcim.com

Exercise 1

General

In this exercise, you will draw the 3D wireframe model shown in Figure 21-28. The dimensions for the model are given in the figure itself. You can start the model from any point.

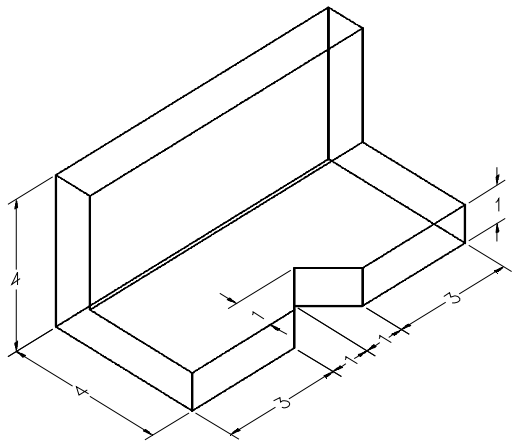

Figure 21-28 *Wireframe model for Exercise 1*

TRIM, EXTEND, AND FILLET COMMANDS IN 3D

As discussed earlier, you can use various options of these commands in 3D space. You can also use the **PROJMODE** and **EDGEMODE** variables. The **PROJMODE** variable sets the projection mode for trimming and extending. A value of 0 implies **True 3D mode**, that is, no projection. In this case, the objects must intersect in 3D space to trim or extend them. It is similar to using the **None** option of the **Project** option of the **EXTEND** and **TRIM** commands. A value of 1 projects onto the *XY* plane of the current UCS and is similar to using the **UCS** option of the **Project** option of the **TRIM** or **EXTEND** commands. A value of 2 projects onto the current view plane and is like using the **View** option of the **Project** option of the **TRIM** or **EXTEND** commands. The value of the **EDGEMODE** system variable controls how the cutting or trimming boundaries are decided. A value of 0 considers the selected edge with no extension. You can also use the **No Extend** option of the **Edge** option of the **TRIM** or **EXTEND** commands. A value of 1 considers an imaginary extension of the selected edge. This is similar to using the **Extend** option of the **Edge** option of the **TRIM** or **EXTEND** commands.

You can fillet coplanar objects whose extrusion directions are not parallel to the z axis of the current UCS by using the **FILLET** command. The fillet arc exists on the same plane and has the same extrusion direction as the coplanar objects. If the coplanar objects to be filleted exist in opposite directions, the fillet arc will be on the same plane but will be inclined toward the positive *Z* axis.

© CADCIM Technologies, USA. For engineering services, contact sales@cadcim.com

© CADCIM Technologies, USA. For online training, contact sales@cadcim.com

SETTING THICKNESS AND ELEVATION FOR NEW OBJECTS

You can create the objects with a preset elevation or thickness using the **ELEV** command. This command is discussed next.

ELEV Command

Command: ELEV

This command is a transparent command and is used to set the elevation and thickness for new objects. The prompt sequence that follows when you invoke this command is given next.

Specify new default elevation <0.0000>:
Specify new default thickness <0.0000>:

Elevation

This option is used to specify the elevation value for new objects. Setting the elevation is nothing but moving the working plane from its default position. By default, the working plane is on the world *XY* plane. You can move this working plane using the **Elevation** option of the **ELEV** command. However, remember that the working plane can be moved only along the *Z* axis (Figure 21-29). The default elevation value is 0.0 and you can set any positive or negative value for elevation. All the objects that will be drawn hereafter will be with the specified elevation. The **Elevation** option sets the elevation only for the new objects and the existing objects are not modified using this option.

Thickness

This option is used to specify the thickness values for the new objects. It is another method of creating the surface models. Specifying the thickness creates the extruded surfaces. The thickness is always taken along the *Z* axis direction (Figure 21-30). The 3D faces will be automatically applied on the vertical faces of the objects drawn with a thickness. The **Thickness** option sets the thickness only for the new objects and the existing objects are not modified using this option.

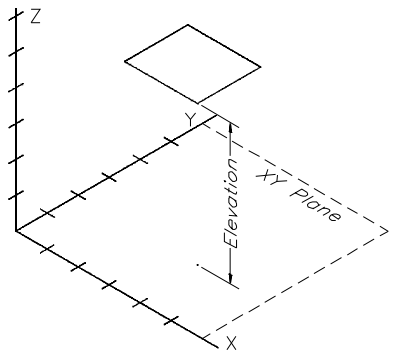

Figure 21-29 *Object drawn with elevation*

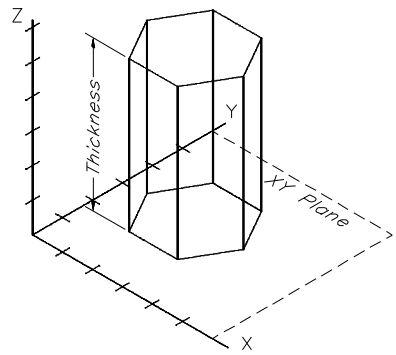

Figure 21-30 *Object drawn with thickness*

Figure 21-31 shows a point, line, ellipse, circle, and a polygon drawn with a thickness and Figure 21-32 shows text with and without thickness. Remember that to write a text with thickness, first write simple text and then change its thickness using any of the commands that modify the properties.

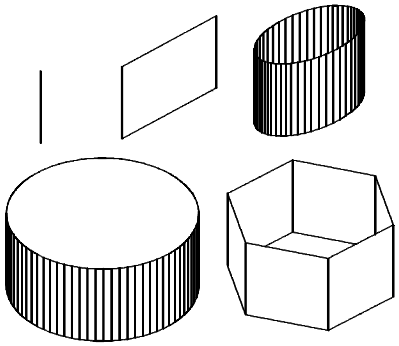

Figure 21-31 *A point, line, ellipse, circle, and a polygon drawn with a thickness of 5 units*

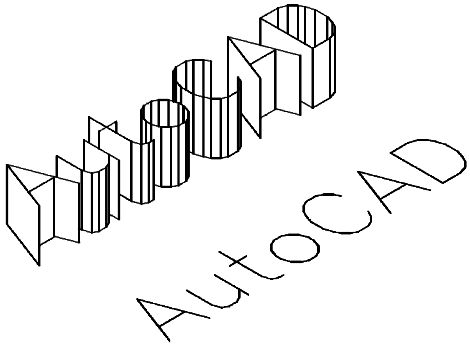

Figure 21-32 *Text with and without thickness*

Tip

The elevation value will be reset to 0.0 when you change the viewpoint using the preset orthographic views in the ***View*** *toolbar.*

The rectangles drawn using the ***RECTANG*** *command do not consider the thickness value set using the* ***ELEV*** *command. To draw a rectangle with thickness, use the* ***Thickness*** *option of the* ***RECTANG*** *command.*

To draw an ellipse with thickness, first set the value of the ***PELLIPSE*** *system variable to* ***1****.*

SUPPRESSING THE HIDDEN EDGES

Menu:	View > Hide
Command:	HIDE

In the 3D objects drawn with some thickness, some of the lines lie behind other lines or objects. These lines are called hidden lines or hidden edges. Sometimes, you may want to suppress the hidden edges in the model to enhance the clarity of the objects. You can suppress these hidden edges using the **HIDE** command. This command is used to suppress the hidden lines in the 3D model. When you invoke this command, all the objects on the screen are regenerated and the 3D models are displayed with the hidden edges suppressed. The hidden lines are again included in the drawing when the next regeneration takes place. Note that the circles, solids and wide polylines are considered to be solids if they are drawn with thickness. In this case the bottom and top faces are also considered. Figure 21-33 shows the objects with thickness displaying the hidden edges and Figure 21-34 shows the objects with thickness and the hidden edges suppressed.

© CADCIM Technologies, USA. For engineering services, contact sales@cadcim.com

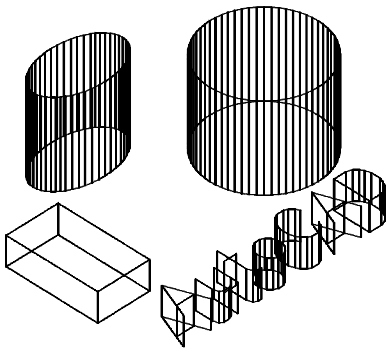

Figure 21-33 *Objects before suppressing the hidden edges*

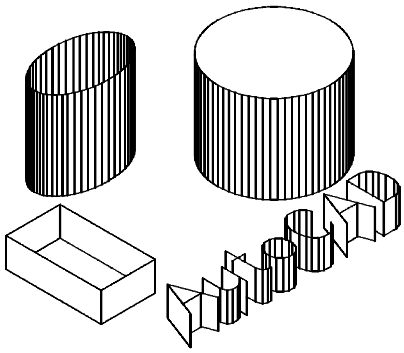

Figure 21-34 *Objects after suppressing the hidden edges*

You can define the color and linetype of the hidden lines using the **OBSCUREDCOLOR** and the **OBSCUREDLTYPE** variables. If you specify any value for these variables, the hidden lines will not be suppressed when you invoke the **HIDE** command. Instead, these lines will be displayed using the color and linetype specified in their respective variables. You will learn more about changing the color and linetype of the hidden lines later in this chapter.

Tip

*The **HIDE** command considers Circles, Solids, Polylines with width, and Regions as opaque surfaces that will hide objects.*

Exercise 2

General

Draw the objects shown in Figure 21-35 and Figure 21-36 using the **Elevation** and **Thickness** options of the **ELEV** command. Hide the hidden lines and then view the objects using different viewpoints.

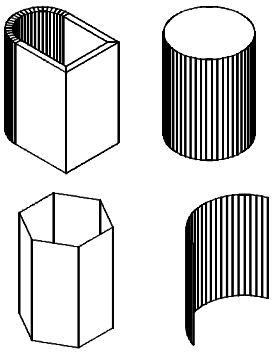

Figure 21-35 *Drawing for Exercise 2*

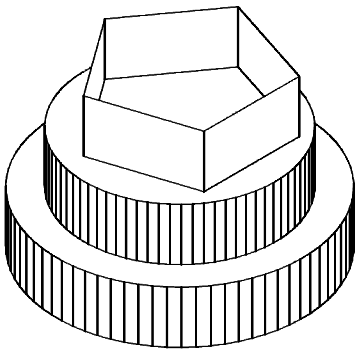

Figure 21-36 *Drawing for Exercise 2*

© CADCIM Technologies, USA. For online training, contact sales@cadcim.com

CREATING 3D POLYLINES

Menu:	Draw > 3D Polyline
Command:	3DPOLY

The **3DPOLY** command is used to draw straight polylines in a 2D plane or in 3D space. This command is similar to the **PLINE** command except that using this command you can draw the polylines in the plane other then the *XY* plane also. However, this command does not provide the **Width** or the **Arc** option and therefore, you can not create a 3D polyline with width or arc. The **Close** and the **Undo** options of this command are similar to those of the **PLINE** command.

Tip

*You can fit a spline curve about the 3D polyline using the **PEDIT** command. Use the **Spline curve** option to fit the spline curve and the **Decurve** option to remove the spline curve.*

CREATING REGIONS

Toolbar:	Draw > Region
Menu:	Draw > Region
Command:	REGION

The **REGION** command is used to create regions from the selected loops or closed entities. Regions are the 2D entities with properties of the 3D solids. You can apply the Boolean operation on the regions and you can also calculate the mass properties of the regions. Bear in mind that the 2D entity you want to convert into a region should be a closed loop. Once you have created regions, the original object is deleted automatically. However, if the value of the **DELOBJ** system variable is set to **0**, the original object is retained. The valid selection set for creating the regions are closed polylines, lines, arcs, splines, circles, or ellipses. The current color, layer, linetype, and lineweight will be applied to the regions.

CREATING COMPLEX REGIONS BY APPLYING BOOLEAN OPERATIONS

You can create complex regions by applying the Boolean operations on them. The various Boolean operations that can be performed are union, subtract, and intersect. The commands used to apply these Boolean operations are discussed next.

Combining Regions

Menu:	Modify > Region > Union
Command:	UNION

The **UNION** command is used to apply the union Boolean operation on the selected set of regions. You can create a composite region by combining them using this command. You can combine any number of regions. When you invoke this command, you will be prompted to select the regions to be added (Figure 21-37). Figure 21-38 shows the complex region created by uniting the two regions shown in Figure 21-37.

© CADCIM Technologies, USA. For engineering services, contact sales@cadcim.com

© CADCIM Technologies, USA. For online training, contact sales@cadcim.com

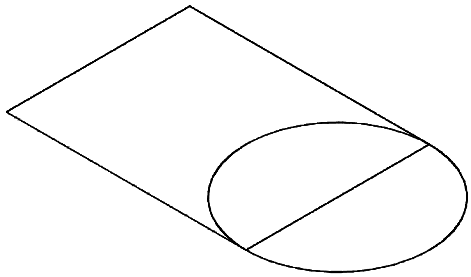

Figure 21-37 *Two different regions before union*

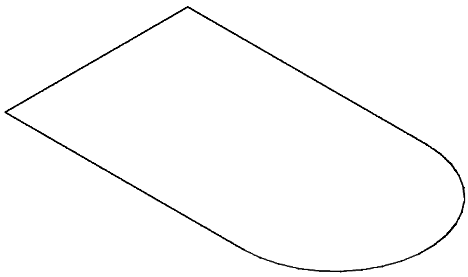

Figure 21-38 *Single region after union*

Subtracting Regions

Menu:	Modify > Region > Subtract
Command:	SUBTRACT

The **SUBTRACT** command is used to create a composite region by removing the material common to the selected set of regions. When you invoke this command, you will be prompted to select the set of regions to subtract from. Once you have selected the set of regions to subtract from, you will be prompted to select the regions to subtract. The material common to the first selection set and the second selection set is removed from the first selection set. The resultant object will be a single composite region, see Figure 21-39 and Figure 21-40.

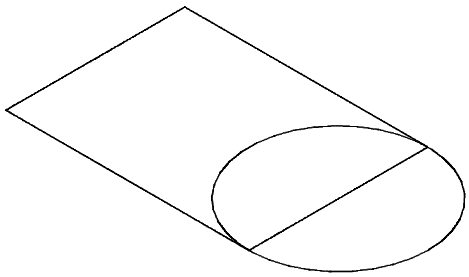

Figure 21-39 *Two different regions before subtracting*

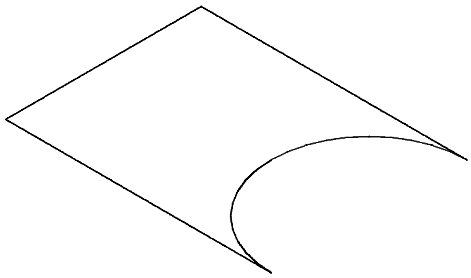

Figure 21-40 *Single region after subtracting*

Intersecting Regions

Menu:	Modify > Region > Intersect
Command:	INTERSECT

The **INTERSECT** command is used to create a composite region by retaining the material common to the selected set of regions. When you invoke this command, you will be prompted to select the regions be to intersected. The material common to all the selected regions will be retained to create a new composite solid (Figure 21-41 and Figure 21-42).

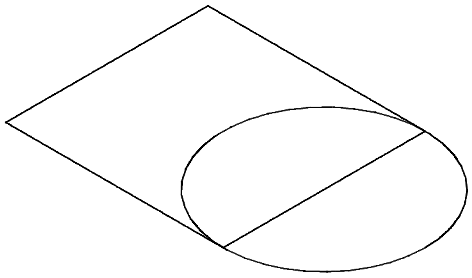

Figure 21-41 *Two different regions before intersecting*

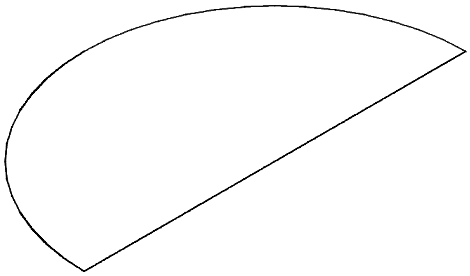

Figure 21-42 *Single region after intersecting*

Exercise 3

General

Draw the objects shown in Figure 21-43 by creating different regions and then bringing them together. Assume the dimensions.

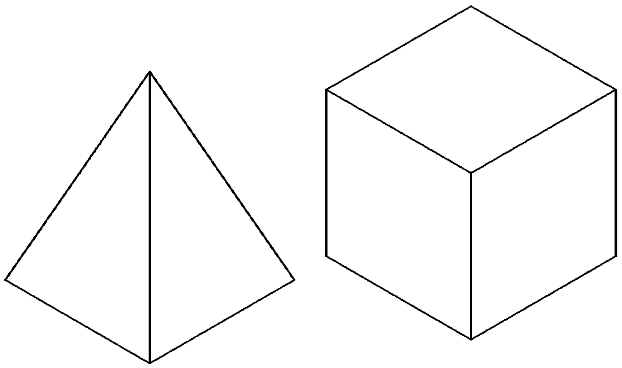

Figure 21-43 *Drawing for Exercise 3*

DYNAMIC VIEWING OF 3D OBJECTS

With the **DVIEW** command, you can create a parallel projection or a perspective view of objects on the screen. Basically, **DVIEW** is an improvement over the **VPOINT** command in that the **DVIEW** command allows you to visually maneuver around 3D objects to obtain different views.

© CADCIM Technologies, USA. For engineering services, contact sales@cadcim.com

As just mentioned, the **DVIEW** command offers you a choice between parallel viewing and perspective viewing. The difference between the two is that in parallel view, parallel lines in the 3D object remain parallel, whereas in perspective view, parallel lines meet at a vanishing point. These definitions suggest that with the **VPOINT** command, only parallel viewing is possible. When the perspective view is current, **ZOOM**, **PAN**, **'ZOOM**, **'PAN**, **DSVIEWER** commands, and scroll bars are not available. The **DVIEW** command uses the camera and target concept to visualize an object from any desired position in 3D space. The position from which you want to view the object (the viewer's eye) is the camera, and the focus point is the target. The line formed between these two points is the line of sight, also known as the viewing direction. To get different viewing directions, you can move the camera or target or both. Once you have the required viewing direction, you can change the distance between the camera and the target by moving the camera along the line of sight. The field of view can be changed by attaching a wide-angle lens or a telephoto lens to the camera. You can pan or twist (rotate) the image. The hidden lines in the object being viewed can be suppressed. You can clip those portions of the model that you do not want to see. All these options of the **DVIEW** command demonstrate how useful this command is. The **'ZOOM**, **DSVIEWER**, **PAN** commands and Scroll bars are not available in the **DVIEW** command.

Command: **DVIEW** Enter
Select objects or <use DVIEWBLOCK>: *Select the objects you want to view dynamically or press ENTER to use the DVIEWBLOCK.*
Enter option
[CAmera/TArget/Distance/POints/PAn/Zoom/TWist/CLip/Hide/Off/Undo]: *Specify a point or enter an option.*

The point you specify is the start point for dragging. As you move the cursor, the viewing direction changes. The Command prompt is given next.

Enter direction and magnitude angles: *Enter angles between 0 to 360-degree or specify on screen.*

The direction angle determines the front of the view and the magnitude angle determines the how far the view is. The different **DVIEW** command options are discussed next.

CAmera Option

With the **CAmera** option, you can rotate the camera about the target point. To invoke the CAmera option, enter CA at the **Enter option [CAmera/TArget/Distance/POints/PAn/Zoom/TWist/CLip/Hide/Off/Undo]** prompt. Once you have invoked this option, the drawing is still, but you can maneuver the camera up and down (above or below the target) or you can move it left or right (clockwise or counterclockwise around the target). Remember that when you are moving the camera, the target is stationary, and that when you are moving the target, the camera is stationary. The next prompt AutoCAD LT displays is given next.

Specify camera location, or enter angle from XY plane, or [Toggle (angle in)] <current>:

By default, this prompt asks you for the angle from the *XY* plane of the camera to the current UCS. This is nothing but the vertical (up or down) movement of the camera about the target.

© CADCIM Technologies, USA. For online training, contact sales@cadcim.com

There are two ways to specify the angle.

1. You can specify the angle of rotation by moving the graphics cursor in the graphics area until you attain the desired rotation and then choosing the pick button of your pointing device. You will notice that as you move the cursor in the graphics area, the angle of rotation is continuously displayed in the status bar. Also, as you move the cursor, the object also moves dynamically. If you give a horizontal movement to the camera at the **Specify camera location, or enter angle from XY plane, or [Toggle (angle in)] <current>** prompt, notice that the angle value displayed in the status bar does not change. This is because at the **Specify camera location, or enter angle from XY plane, or [Toggle (angle in)] <current>** prompt, you are required to specify the vertical movement.

2. The other way to specify the angle of rotation is by entering the required angle of rotation value at the prompt. An angle of 90-degree (default value) from the *XY* plane makes the camera look at the object straight down from the top side of the object, providing you with the top view (plan view). In this case, the line of sight is perpendicular to the *XY* plane of the current UCS. An angle of negative 90-degree makes the camera look at the object straight up from the bottom side of the object. As you move the camera toward the top side of the object, the angle value increases. If you do not want to specify a vertical movement, press ENTER.

Once you have specified the angle from the *XY* plane, the next prompt displayed is given next.

Specify camera location, or enter angle in XY plane from X axis, or [Toggle (angle from)] <current>:

This prompt asks you for the angle of the camera in the *XY* plane from the *X* axis. This is nothing but the horizontal (right or left) movement of the camera. You can enter the angle value in the range of -180 to 180-degree. Moving the camera toward the right side of the object (counterclockwise) can be achieved by increasing the angle value; moving the camera toward the left side of the object (clockwise) can be achieved by decreasing the angle value. You can also toggle between these two prompts using the **Toggle (angle from)** or **Toggle (angle in)** option in the two prompts. The use of the **toggle** option can be illustrated as follows.

There are two ways to enter only the angle in the *XY* plane from the *X* axis. The first is to give a null response to the **Specify camera location, or enter angle from XY plane, or [Toggle (angle in)] <default>** prompt. The other is by using the **Toggle (angle in)** option. Hence, to switch from the **Specify camera location, or enter angle from XY plane, or [Toggle (angle in)] <default>** prompt to the **Specify camera location, or enter angle in XY plane from X axis, or [Toggle (angle from)] <current>** prompt, you will have the following prompt sequence.

Specify camera location, or enter angle from XY plane, or [Toggle (angle in)] <default>: **T** Enter

© CADCIM Technologies, USA. For engineering services, contact sales@cadcim.com

Specify camera location, or enter angle in XY plane from X axis, or [Toggle (angle from)] <current>:

In the same manner, if you want to switch from the **Specify camera location, or enter angle in XY plane from X axis, or [Toggle (angle from)] <current>** prompt to the **Specify camera location, or enter angle from XY plane, or [Toggle (angle in)] <default>** prompt, the following will be the prompt sequence.

Specify camera location, or enter angle in XY plane from X axis, or [Toggle (angle from)] <current>: **T** Enter
Specify camera location, or enter angle from XY plane, or [Toggle (angle in)] <default>:

You have gone through the basic concept of the **CAmera** option of the **DVIEW** command. Now, you will work out some examples to apply the camera concept.

Tip

*The **DVIEWBLOCK** is automatically displayed when you use **DVIEW** without selecting objects. You can define or redefine your own substitute **DVIEWBLOCK**, just like any other block using the **BLOCK** command. Make sure to define it to a 1X1X1 unit size so that it will be properly scaled in the **DVIEW** command.*

Example 3

In Figure 21-44, you have four sections. The house shown can be obtained by pressing ENTER at the **Select objects or <use DVIEWBLOCK>** prompt. The drawing of the house with a window, an open door, and a chimney obtained on the screen is a block named **DVIEWBLOCK**. As you use various options of the **DVIEW** command, the block is updated to reflect the changes.

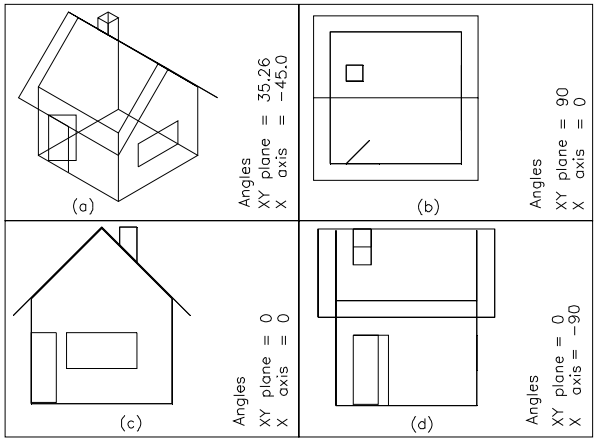

Figure 21-44 *The **CAmera** option of the **DVIEW** command*

© CADCIM Technologies, USA. For online training, contact sales@cadcim.com

Once you come out of the **DVIEW** command, the entire drawing is regenerated, and the view obtained depends on the view you have selected using the various options of the **DVIEW** command. In this chapter, you will use this block to demonstrate the effect of various options of the **DVIEW** command. However, you can make a custom block of your own. The block should be of unit size. Set the lower left corner of the block as the origin point. The different views of the house block you see in Figure 21-44 can be obtained with the **CAmera** option of the **DVIEW** command. First, use the **DVIEW** command to get the image of the house on the screen.

Command: **DVIEW** Enter
Select objects or <use DVIEWBLOCK>: Enter

Now, you have the image of the house on the screen. For Figure 21-44(a) (3D view), the following is the prompt sequence.

Enter option
[CAmera/TArget/Distance/POints/PAn/Zoom/TWist/CLip/Hide/Off/Undo]: **CA** Enter
Specify camera location, or enter angle from XY plane, or [Toggle (angle in)] <current>: **35.26** Enter
Specify camera location, or enter angle in XY plane from X axis, or [Toggle (angle from)] <current>: **-45** Enter
Enter option
[CAmera/TArget/Distance/POints/PAn/Zoom/TWist/CLip/Hide/Off/Undo]: Enter
Regenerating model.

Once you exit the **DVIEW** command, the figure of the house is removed from the screen. For Figure 21-44(b) (top view), the following is the prompt sequence.

Command: **DVIEW** Enter
Select objects or <use DVIEWBLOCK>: Enter
Enter option
[CAmera/TArget/Distance/POints/PAn/Zoom/TWist/CLip/Hide/Off/Undo]: **CA** Enter
Specify camera location, or enter angle from XY plane, or [Toggle (angle in)] <current>: **90** Enter
Specify camera location, or enter angle in XY plane from X axis, or [Toggle (angle from)] <current>: **0** Enter
Enter option
[CAmera/TArget/Distance/POints/PAn/Zoom/TWist/CLip/Hide/Off/Undo]: Enter
Regenerating model.

For Figure 21-44(c) (right side view), the following is the prompt sequence.

Command: **DVIEW** Enter
Select objects or <use DVIEWBLOCK>: Enter
Enter option
[CAmera/TArget/Distance/POints/PAn/Zoom/TWist/CLip/Hide/Off/Undo]: **CA**

© CADCIM Technologies, USA. For engineering services, contact sales@cadcim.com

Specify camera location, or enter angle from XY plane, or [Toggle (angle in)] <current>: **0.00** Enter
Specify camera location, or enter angle in XY plane from X axis, or [Toggle (angle from)] <current>: **0.00** Enter
Enter option
[CAmera/TArget/Distance/POints/PAn/Zoom/TWist/CLip/Hide/Off/Undo]: Enter
Regenerating model.

For Figure 21-44(d) (front view), the following is the prompt sequence.

Command: **DVIEW** Enter
Select objects or <use DVIEWBLOCK>: Enter
Enter option
[CAmera/TArget/Distance/POints/PAn/Zoom/TWist/CLip/Hide/Off/Undo]: **CA** Enter
Specify camera location, or enter angle from XY plane, or [Toggle (angle in)] <current>: **0.00** Enter
Specify camera location, or enter angle in XY plane from X axis, or [Toggle (angle from)] <current>: **-90.00** Enter
Enter option
[CAmera/TArget/Distance/POints/PAn/Zoom/TWist/CLip/Hide/Off/Undo]: Enter
Regenerating model.

TArget Option

With the **TArget** option you can rotate the target point with respect to the camera. To invoke the **TArget** option, enter TA at the **Enter option [CAmera/ TArget/ Distance/ POints/ PAn/ Zoom/ TWist/ CLip/ Hide/ Off/ Undo]** prompt. Once you have invoked this option, the drawing is still, but you can maneuver the target point up or down or left or right about the camera. When you move the target, the camera is stationary. The prompt sequence for the **TArget** option is given next.

Command: **DVIEW** Enter
Select objects or <use DVIEWBLOCK>: Enter
Enter option
[CAmera/TArget/Distance/POints/PAn/Zoom/TWist/CLip/Hide/Off/Undo]: **TA** Enter
Specify camera location, or enter angle from XY plane, or [Toggle (angle in)] <current>: *Specify the angle about which the target will lie above or below the camera.*
Specify camera location, or enter angle in XY plane from X axis, or [Toggle (angle from)] <current>: *Specify the angle about which the target will lie left or right of the camera.*
Enter option
[CAmera/TArget/Distance/POints/PAn/Zoom/TWist/CLip/Hide/Off/Undo]: Enter

The prompt sequence does not reveal the difference between the **CAmera** option and the **TArget** option. The difference lies in the actual angle of view. For example, if you specify an angle of 90-degree in the **Specify camera location, or enter angle from XY plane, or [Toggle (angle in)] <current>** prompt of the **CAmera** option, your viewing direction is from the top of the object

© CADCIM Technologies, USA. For online training, contact sales@cadcim.com

toward the bottom; if you specify the same angle in the same prompt for the **TArget** option, your viewing direction is from the bottom of the object toward the top.

Example 4

The different views of the house block in Figure 21-45 can be obtained with the **TArget** option of the **DVIEW** command.

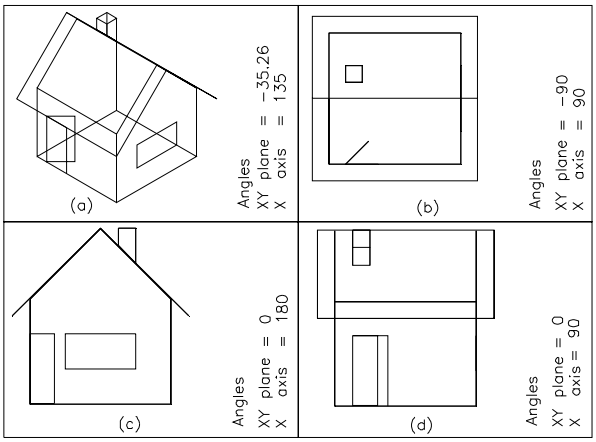

Figure 21-45 *The* ***TArget*** *option of the* ***DVIEW*** *command*

First, use the **DVIEW** command to display the image of the house on the screen.

Command: **DVIEW** Enter
Select objects or <use DVIEWBLOCK>: Enter

For Figure 21-45(a) (3D view), the following is the prompt sequence.

Enter option
[CAmera/TArget/Distance/POints/PAn/Zoom/TWist/CLip/Hide/Off/Undo]: **TA** Enter
Specify camera location, or enter angle from XY plane, or [Toggle (angle in)] <current>: **-35.26** Enter
Specify camera location, or enter angle in XY plane from X axis, or [Toggle (angle from)] <current>: **135** Enter
Enter option
[CAmera/TArget/Distance/POints/PAn/Zoom/TWist/CLip/Hide/Off/Undo]: Enter
Regenerating model.

For Figure 21-45(b) (top view), the following is the prompt sequence.

Command: **DVIEW** Enter
Select objects or <use DVIEWBLOCK>: Enter

© CADCIM Technologies, USA. For engineering services, contact sales@cadcim.com

Enter option
[CAmera/TArget/Distance/POints/PAn/Zoom/TWist/CLip/Hide/Off/Undo]: **TA** Enter
Specify camera location, or enter angle from XY plane, or [Toggle (angle in)] <current>: **-90.00** Enter
Specify camera location, or enter angle in XY plane from X axis, or [Toggle (angle from)] <current>: **90.00** Enter
Enter option
[CAmera/TArget/Distance/POints/PAn/Zoom/TWist/CLip/Hide/Off/Undo]: Enter
Regenerating model

For Figure 21-45(c) (right side view), the following is the prompt sequence.

Command: **DVIEW** Enter
Select objects or <use DVIEWBLOCK>: Enter
Enter option
[CAmera/TArget/Distance/POints/PAn/Zoom/TWist/CLip/Hide/Off/Undo]: **TA** Enter
Specify camera location, or enter angle from XY plane, or [Toggle (angle in)] <current>: **0.00** Enter
Specify camera location, or enter angle in XY plane from X axis, or [Toggle (angle from)] <current>: **180.00** Enter
Enter option
[CAmera/TArget/Distance/POints/PAn/Zoom/TWist/CLip/Hide/Off/Undo]: Enter
Regenerating model

For Figure 21-45(d) (front view), the following is the prompt sequence.

Command: **DVIEW** Enter
Select objects or <use DVIEWBLOCK>: Enter
Enter option
[CAmera/TArget/Distance/POints/PAn/Zoom/TWist/CLip/Hide/Off/Undo]: **TA** Enter
Specify camera location, or enter angle in XY plane from X axis, or [Toggle (angle from)] <default>: **0.00** Enter
Specify camera location, or enter angle in XY plane from X axis, or [Toggle (angle from)] <default>: **90.00** Enter
Enter option
[CAmera/TArget/Distance/POints/PAn/Zoom/TWist/CLip/Hide/Off/Undo]: Enter
Regenerating model.

Distance Option

As mentioned before, the line obtained on joining the camera position and the target position is known as the line of sight. The **Distance** option can be used to move the camera toward or away from the target along the line of sight. Invoking the **Distance** option enables perspective viewing. Since we have not used the **Distance** option until now, all the previous views were in parallel projection. In perspective display, the objects nearer to the camera appear bigger than objects that are farther away from the camera position. In other words, in perspective views

© CADCIM Technologies, USA. For online training, contact sales@cadcim.com

the parallel lines meet at a vanishing point. Another noticeable difference is that the regular coordinate system icon is replaced by the perspective icon. This icon acts as a reminder that perspective viewing is enabled. The **Distance** option can be invoked by entering **D** at the **Enter option [CAmera/TArget/Distance/POints/PAn/Zoom/TWist/CLip/Hide/Off/Undo]** prompt. Once you invoke the **Distance** option, AutoCAD LT prompts you to specify the new distance between the camera and the target.

Specify new camera-target distance <1.0000>: *Enter the desired distance between the camera and the target.*

On the top side of the screen, a slider bar appears. It is marked from 0x to 16x. The current distance is represented by the 1x mark. This is verified by the fact that the slider bar moves right or left with respect to the 1x mark on the slider bar. As you move the slider bar toward the right, the distance between the camera and the target increases; as you move the slider bar toward the left, the distance between the camera and the target decreases. For example, when you move the slider bar to the 16x mark, the distance between the camera and the target increases 16 times, or you can say that the camera moved away from the target on the line of sight sixteen times the previous distance. The distance between the camera and the target is dynamically displayed in the status line. If you cannot display the entire object on the screen by moving the slider bar to the 16x mark, enter a larger distance at the keyboard. To revert to parallel viewing, invoke the **Off** option. If you want to magnify the drawing without turning the Perspective viewing on, you can use the **Zoom** option.

Example 5

Let Figure 21-46(a) be the default figure, in which the distance between the camera and target is 4 units, which corresponds to the 1x mark on the slider bar. You can change the distance between the camera and target and get different views as follows.

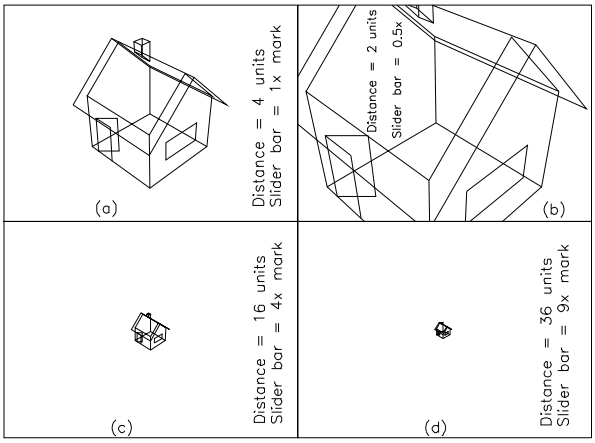

Figure 21-46 *The* ***Distance*** *option of the* ***DVIEW*** *command*

© CADCIM Technologies, USA. For engineering services, contact sales@cadcim.com

For Figure 21-46(b), the following is the prompt sequence.

Command: **DVIEW** Enter
Select objects or <use DVIEWBLOCK>: Enter
Enter option
[CAmera/TArget/Distance/POints/PAn/Zoom/TWist/CLip/Hide/Off/Undo]: **D** Enter
Specify new camera-target distance <4.0000>: **2.0** Enter

For Figure 21-46(c), the following is the prompt sequence.

Command: **DVIEW** Enter
Select objects or <use DVIEWBLOCK>: Enter
Enter option
[CAmera/TArget/Distance/POints/PAn/Zoom/TWist/CLip/Hide/Off/Undo]: **D** Enter
Specify new camera-target distance <4.0000>: **16.0** Enter *or move the pointer to the 4x mark on slider bar.*

For Figure 21-46(d), the following is the prompt sequence.

Command: **DVIEW** Enter
Select objects or <use DVIEWBLOCK>: Enter
Enter option
[CAmera/TArget/Distance/POints/PAn/Zoom/TWist/CLip/Hide/Off/Undo]: **D** Enter
Specify new camera-target distance <4.0000>: **36.0** Enter *or move the pointer to the 9x mark on slider bar.*

POints Option

With the **POints** option, you can specify the camera and target positions (points) in *X*, *Y*, *Z* coordinates. You can specify the *X*, *Y*, *Z* coordinates of the point by any method used to specify points, including object snap and .X, .Y, .Z point filters. The *X*, *Y*, *Z* coordinate values are with respect to the current UCS. If you use the object snap to specify the points, you must type the name of the object snap. This option can be invoked by entering PO at the **Enter option [CAmera/TArget/Distance/POints/PAn/Zoom/TWist/CLip/Hide/Off/Undo]** prompt.

Command: **DVIEW** Enter
Select objects or <use DVIEWBLOCK>: Enter
Enter option
[CAmera/TArget/Distance/POints/PAn/Zoom/TWist/CLip/Hide/Off/Undo]: **PO** Enter

The target point needs to be specified first. A rubber-band line is drawn from the current target position to the drawing crosshairs. This is the line of sight.

Specify target point <current>: *Specify the location of the target or press ENTER.*

Once you have specified the target point, you are prompted to specify the camera point. A

© CADCIM Technologies, USA. For online training, contact sales@cadcim.com

rubber-band line is drawn between the target point and the drawing crosshairs. This helps you to place the camera relative to the target.

Enter camera point <current>: *Specify the location of the camera press ENTER.*

The establishment of the new target point and camera point should be carried in parallel projection. If you specify these two points while the perspective projection is active, the perspective projection is temporarily turned off, until you specify the camera and target points. Once this is done, the object is again displayed in perspective. If the viewing direction is changed by the new target location and camera location, the preview image is regenerated to show the change. In Figure 21-47, the target is located at the lower corner of the house, and the camera is located at the corner of the chimney. In Figure 21-48, the camera is located at the lower corner of the house, and the target is located at the corner of the chimney. Both these points are marked by cross marks.

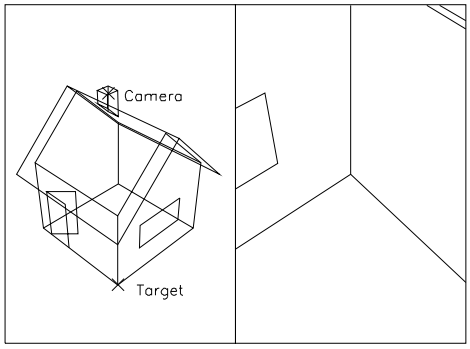

Figure 21-47 *The* ***POints*** *option of the* ***DVIEW*** *command*

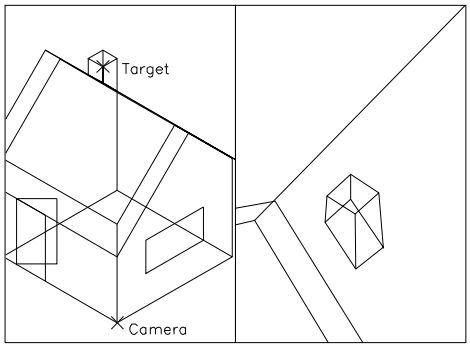

Figure 21-48 *The* ***POints*** *option of the* ***DVIEW*** *command*

PAn Option

The **PAn** option of the **DVIEW** command resembles the **PAN** command. This option lets you shift the entire drawing with respect to the graphics display area. Just as with the **PAN** command, you have to specify the pan distance and direction by specifying two points. You must use a pointing device to specify the two points if perspective viewing is active. The prompt sequence for this option is given next.

Command: **DVIEW** Enter
Select objects or <use DVIEWBLOCK>: Enter
Enter option
[CAmera/TArget/Distance/POints/PAn/Zoom/TWist/CLip/Hide/Off/Undo]: **PA** Enter
Specify displacement base point: *Specify the first point.*
Specify second point: *Specify the second point.*

© CADCIM Technologies, USA. For engineering services, contact sales@cadcim.com

Zoom Option

The **Zoom** option of the **DVIEW** command resembles the **ZOOM** command. With the help of this option, you can enlarge or reduce the drawing. This option can be invoked by entering Z at the following prompt.

Enter option
[CAmera/TArget/Distance/POints/PAn/Zoom/TWist/CLip/Hide/Off/Undo]: **Z** Enter
Specify lens length <50.000mm>: *Specify the new lens length*.

Just as with the **Distance** option, in the **Zoom** option a slider bar marked from 0x to 16x is displayed on the top side of the screen. The default position on the slider bar is 1x. Two ways to zoom can now be specified. The first is when perspective is enabled. In this case, zooming is defined in terms of the lens length. The 1x mark (default position) corresponds to a 50.000 mm lens length. As you move the slider bar toward the right, the lens length increases, and as you move the slider bar toward the left, the lens length decreases. For example, when you move the slider bar to the 16x mark, the lens length increases sixteen times, which is 16 x 50.000 mm = 800.000 mm. You can simulate the telephoto effect by increasing the lens length; by reducing the lens length, you can simulate the wide-angle effect. The lens length is dynamically displayed in the status bar. If perspective is not enabled, zooming is defined in terms of the zoom scale factor. In this case, the **Zoom** option resembles the **ZOOM Center** command, and the center point lies at the center of the current viewport. The 1x mark (default position) corresponds to a scale factor of 1. As you move the slider bar toward the right, the scale factor increases; as you move the slider bar toward the left, the scale factor decreases. For example, when you move the slider bar to the 16x mark, the scale factor increases 16 x 1 = 16 times. The scale factor is dynamically displayed on the status line.

Command: **DVIEW** Enter
Select objects or <use DVIEWBLOCK>: *Select the objects*.
Enter option
[CAmera/TArget/Distance/POints/PAn/Zoom/TWist/CLip/Hide/Off/Undo]: **Z** Enter
Specify zoom scale factor <1>: *Specify the scale factor*.

Example 6

In this example, you will see the effect of the **Zoom** option in perspective projection. In Figure 21-49(a), the lens length is set to 25 mm. This can be realized in the following manner.

Command: **DVIEW** Enter
Select objects or <use DVIEWBLOCK>: Enter
Enter option
[CAmera/TArget/Distance/POints/PAn/Zoom/TWist/CLip/Hide/Off/Undo]: **Z** Enter
Specify lens length <50.000mm>: **25** Enter

Similarly, for Figure 21-49(b), (c), and (d), you can set lens lengths to 50 mm, 75 mm, and 125 mm, respectively.

© CADCIM Technologies, USA. For online training, contact sales@cadcim.com

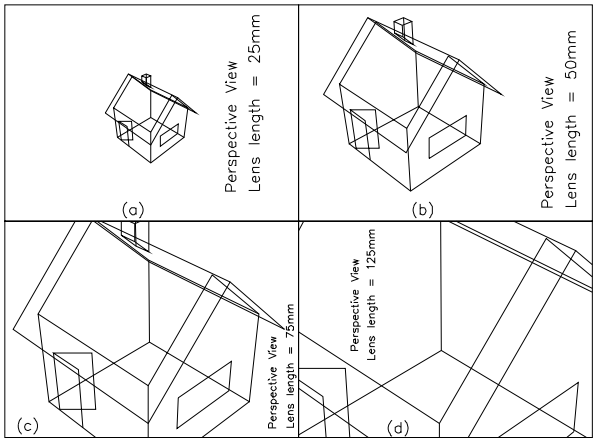

Figure 21-49 *The* ***Zoom*** *option of the* ***DVIEW*** *command*

TWist Option

The **TWist** option allows you to rotate (twist) the view around the line of sight. You can also say that the object on the screen is rotated around the center point of the screen because the display is always adjusted so that the target point is at the center of the screen. If you use a pointing device to specify the angle, the angle value is dynamically displayed on the status line. A rubber-band line is drawn from the center (target point) to the drawing crosshairs, and as you move the crosshairs with a pointing device, the object on the screen is rotated around the line of sight. You can also enter the angle of twist from the keyboard. The angle of twist is measured in a counterclockwise direction starting from the right side.

Command: **DVIEW** Enter
Select objects or <use DVIEWBLOCK>: Enter
Enter option
[CAmera/TArget/Distance/POints/PAn/Zoom/TWist/CLip/Hide/Off/Undo]: **TW** Enter
Specify view twist angle <0.00>: *Specify the angle of rotation (twist).*

In Figure 21-50, different twist angles have been specified. For (a) the twist angle is 0, for (b) it is 338-degree, for (c) it is 37-degree, and for (d) it is 360-degree.

© CADCIM Technologies, USA. For engineering services, contact sales@cadcim.com

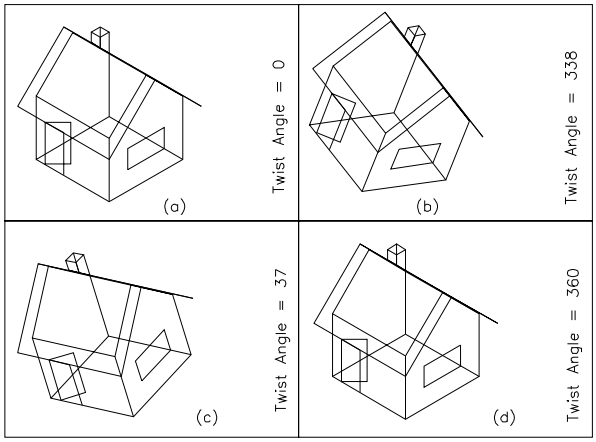

Figure 21-50 *The* ***TWist*** *option of the* ***DVIEW*** *command*

CLip Option

The **CLip** option can be used to clip sections of the drawing (Figure 21-51). AutoCAD LT uses two invisible clipping planes to realize clipping. These clipping walls can be positioned anywhere on the screen and are perpendicular to the line of sight (line between target and camera). Once you position the clipping planes, AutoCAD LT conceals all the lines that are in front of the front clipping plane or behind the back clipping plane. The **CLip** option can be used in both parallel and perspective projections. When perspective is enabled, the front clipping plane is automatically enabled.

Note

If you have specified a positive distance, the clipping plane is placed between the target and the camera. If the distance you have specified is negative, the clipping plane is placed beyond the target.

The prompt sequence for the **CLip** option is given next.

Enter option
[CAmera/TArget/Distance/POints/PAn/Zoom/TWist/CLip/Hide/Off/Undo]: **CL** Enter
Enter clipping option [Back/Front/Off]<Off>: **B** Enter
Specify distance from target or [ON/OFF] <current>:

Once you have specified which clipping plane you want to set (the back clipping plane in our case), a slider bar appears on the screen. As you move the pointer toward the right side of the slider bar, the negative distance between the target and the clipping plane increases. As you move toward the left side of the slider bar, the positive distance between the target and the clipping plane increases; therefore, a greater portion of the drawing is clipped. The rightmost mark on the slider bar corresponds to a distance equal to the distance between the target and the

© CADCIM Technologies, USA. For online training, contact sales@cadcim.com

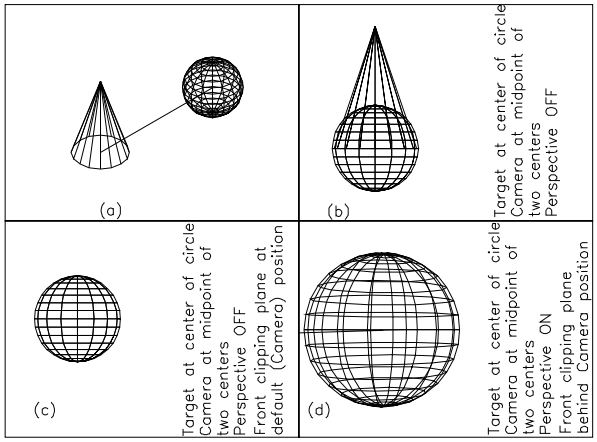

Figure 21-51 *Using the* ***CLip*** *option to clip the view*

farthermost point on the object you want to clip. After specifying the distance between one of the clipping planes (back clipping plane in this prompt sequence), you need to invoke the **CLip** option again and to specify the position of the front clipping plane in terms of the distance between the front clipping plane and the target. As you move the slider bar toward the right, the negative distance between the target and the front clipping plane increases. As the negative distance increases, a greater portion of the front side of the drawing is clipped. The rightmost mark on the slider bar corresponds to a distance equal to the distance between the target and the back clipping plane.

Enter option
[CAmera/TArget/Distance/POints/PAn/Zoom/TWist/CLip/Hide/Off/Undo]: **CL** Enter
Enter clipping option [Back/Front/Off] <Off>: **F** Enter
Specify distance from target or [set to Eye(camera)/ON/OFF] <1.0000>: *Specify the distance from target.*

To illustrate the concepts behind clipping, let us display two objects (a sphere and a cone). Let the distance between the two be 10 units. Draw a line between the center of the sphere and the center of the cone. Use the **POints** option to position the target at the center of the sphere and the camera at the midpoint of the line joining the two center points. In this way, you have defined the line between the two center points as the line of sight.

Now that you have defined the target and the camera, you will see the sphere and the cone overlapping because both of them are aligned along the line of sight. You may wonder how you are able to see the cone, since it lies behind the camera position that is analogous to the eye. This is because in parallel projection, the camera is not analogous to the eye, but the line of sight is; therefore, you see everything that lies in the field of vision (determined by the **Zoom** option) about the line of sight. Now, when you use the **CLip** option and the **Front** suboption to positioned at the camera point. Now you cannot see the objects (cone in our case) that are

© CADCIM Technologies, USA. For engineering services, contact sales@cadcim.com

behind the camera point because the default position of the front clipping plane is at the camera position; therefore, any object in front of the front clipping plane is clipped. Also, if you have placed the front clipping plane behind the camera position and the perspective projection is on, the camera position is used as the front clipping plane position.

If you change the front clipping plane position, and then at some stage you want to go back to the default front clipping plane position, you can use the **Eye** option. In perspective, without invoking the **CLip** option, the front clipping plane is placed at the camera position; therefore, you are able to see only what lies in front of the camera.

Example 7

In Figure 21-52a, the front clipping plane has been established at a distance of 0.50 units. The distance between the camera and the target is 3.50 units. After invoking the **CLip** option, the prompt sequence is given next.

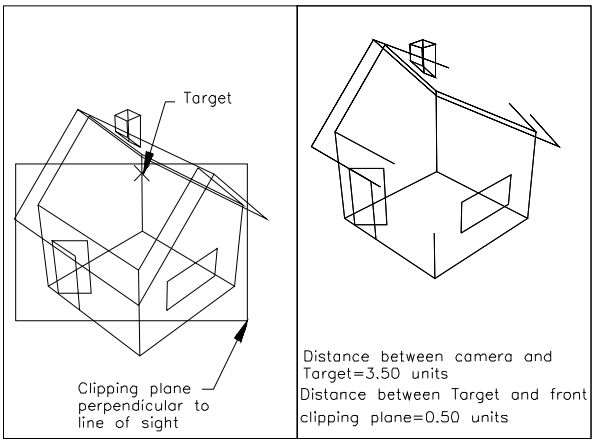

Figure 21-52a *The* ***Front*** *clipping with the* ***DVIEW*** *command*

Enter clipping option [Back/Front/Off]<Off>: **F** Enter
Specify distance from target or [set to Eye(Camera)/On/OFF] <3.5000>: **0.50** Enter

In Figure 21-52b, the back clipping plane has been established at a distance of 0.50 units. The distance between the camera and the target is 3.50 units. After invoking the **CLip** option, the prompt sequence is given next.

Enter clipping option [Back/Front/Off]<Off>: **B** Enter
Specify distance from target or [ON/OFF] <1.0000>: **0.50** Enter

You might have noticed that if you combine the clipped shape in Figure 21-52a and the clipped shape in Figure 21-52b, you get the original shape of the house. The reason is that in the first clipped figure, whatever lies between the camera and the front clipping plane is clipped, whereas

© CADCIM Technologies, USA. For online training, contact sales@cadcim.com

in the second clipped figure, whatever lies behind the back clipping plane is clipped. Since the distances between the clipping planes and the target, and between camera and target are identical in both figures, then if you combine the clipped figures, you will get the original shape.

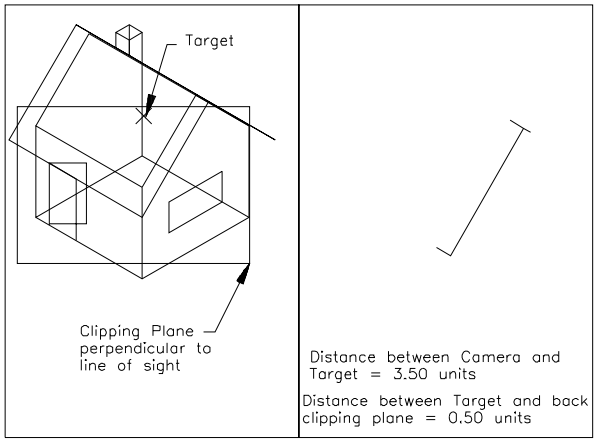

Figure 21-52b *The* ***Back*** *clipping with the* ***DVIEW*** *command*

Hide Option

In most 3D drawings, some of the lines lie behind other lines or objects. Sometimes, you may not want these hidden lines to show up on the screen, so you can use the **Hide** option (Figure 21-53). This option is similar to the **HIDE** command. To invoke the **Hide** option, enter H at the **Enter option [CAmera/TArget/Distance/POints/PAn/Zoom/TWist/CLip/Hide/Off/Undo]** prompt.

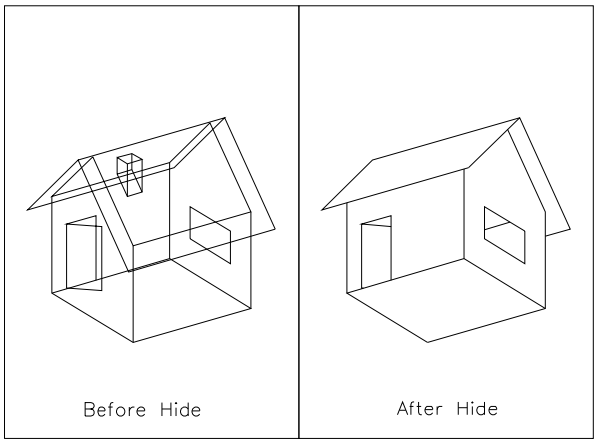

Figure 21-53 *The* ***Hide*** *option of the* ***DVIEW*** *command*

© CADCIM Technologies, USA. For engineering services, contact sales@cadcim.com

Off Option

The **Off** option turns the perspective projection off. The prompt sequence is given next.

Enter option
[CAmera/TArget/Distance/POints/PAn/Zoom/TWist/CLip/Hide/Off/Undo]: **O** Enter

When the perspective projection is turned off, you will notice that the perspective icon is replaced by the regular UCS icon.

Undo Option

The **Undo** option is similar to the **UNDO** command. The **Undo** option nullifies the result of the previous **DVIEW** operation. Just as in the case of the **UNDO** command, you can use this option a number of times to undo the results of multiple **DVIEW** operations. To invoke this option, enter **U** at the following prompt.

Enter option
[CAmera/TArget/Distance/POints/PAn/Zoom/TWist/CLip/Hide/Off/ Undo]: **U** Enter

CREATING SHADED IMAGES

In a 3D object the **HIDE** command can be used to hide the hidden line in the object. By hiding the lines, you can get a better idea about the shape of the object. To get a more realistic image of the object, you can use the **SHADE** and **SHADEMODE** commands.

SHADE Command

Command: SHADE

As you use the **SHADE** command, the hidden lines of the object are removed and the shaded image of the object is displayed. The color of the shaded image depends upon the color of the object. The single light source used here to shade the object is assumed to be placed just over the user's shoulder. Any subsequent changes made in the drawing are not displayed until the **SHADE** command is used again. You have to use the **REGEN** or **ZOOM** command to regenerate the drawing and display the 3D wireframe model. Remember that you cannot use the **Zoom Realtime** option if the drawing is shaded.

SHADEMODE Command

Command: SHADEMODE

The **SHADEMODE** command performs a hide and then creates a flat shaded picture in the current viewport. The shading uses a single light source that is assumed to be located just behind the user over the shoulder. The shaded image can be edited and the **UNDO** command cannot be used to undo shading. Use the **REGEN** or **ZOOM** command to regenerate the drawing and display the 3D wireframe of the object. This command can also be invoked by choosing **Shade** from the **View** menu. The prompts sequence is given next.

© CADCIM Technologies, USA. For online training, contact sales@cadcim.com

Command: **SHADEMODE** Enter
Enter option [2D wireframe/Hidden]<current>: *Enter an option.*

Setting the Shading Method

You can use the **SHADEDGE** system variable to set the shading method. If **SHADEDGE** is 0, AutoCAD LT creates a shaded image with no edges highlighted. If **SHADEDGE** is 1, AutoCAD LT creates a shaded image with edges highlighted in the background color. To see the effect of these two shading methods, you need 256 color display.

If **SHADEDGE** is 2, AutoCAD LT paints the surfaces of the object in the background color and displays the visible edges in the object's color (Figure 21-54). If **SHADEDGE** is 3 (default setting), AutoCAD LT paints the faces in the object's color and displays the edges in the background color (Figure 21-55).

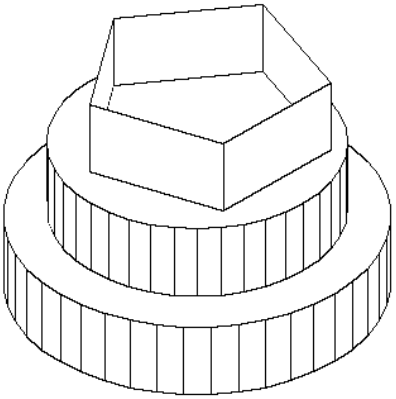

Figure 21-54 *Shading with* ***SHADEDGE*** *= 2, object white, and background white*

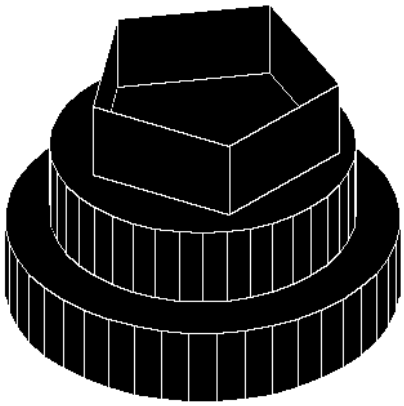

Figure 21-55 *Shading with* ***SHADEDGE*** *= 3, object black, and background white*

Setting Diffuse Reflection

The **SHADEDIF** system variable is used to control the amount of light diffused that AutoCAD LT uses to calculate the shade for each surface. The default value of **SHADEDIF** is 70. It can range from 0 to 100.

ANALYZING THE REGIONS

Toolbar:	Inquiry > Region/Mass Properties
Menu:	Tools > Inquiry > Region/Mass Properties
Command:	MASSPROP

The **MASSPROP** command can be used to analyze a region. This command will automatically calculate the mass properties of the region. When you enter this command, AutoCAD LT will list the properties of the region.

© CADCIM Technologies, USA. For engineering services, contact sales@cadcim.com

Command: **MASSPROP** Enter
Select objects: *Select the region.*

For Coplanar and Noncoplanar Regions. The information displayed for coplanar regions is similar to the following.

```
---------------- REGIONS ----------------

Area:                    46.8365
Perimeter:               28.3977
Bounding box:          X: -9.6884  --  -0.7007
                     Y: 10.3701  --  15.5813
Centroid:              X: -5.1946
                     Y: 12.9757
Moments of inertia:  X: 7991.7731
                     Y: 1579.0882
Product of inertia:  XY: -3156.9161
Radii of gyration:   X: 13.0626
                     Y: 5.8065
Principal moments and X-Y directions about centroid:
                     I: 105.9936 along [1.0000 0.0000]
                     J: 315.2792 along [0.0000 1.0000]

Write analysis to a file? [Yes/No] <N>:
```

If you enter Y (Yes) at this last prompt, the **Create Mass and Area Properties File** dialog box is displayed as shown in Figure 21-56. All the file names of the *.mpr* type are listed. You can enter the name of the file in the **File name** edit box. The file is automatically given the *.mpr* extension.

The various terms displayed on the screen as a result of invoking the **MASSPROP** command are explained next.

Area. It is the enclosed area of the region.

Perimeter. Total length of inside and outside loops of region.

Bounding box. For regions that are coplanar with the *XY* plane of the current UCS, the bounding box is defined by the diagonally opposite corners of a rectangle that encloses the region. For regions that are not coplanar with the *XY* plane of the current UCS, the bounding box is defined by the diagonally opposite corners of a 3D box that encloses the region.

Centroid. This provides the coordinates of the center of area for the selected region.

© CADCIM Technologies, USA. For online training, contact sales@cadcim.com

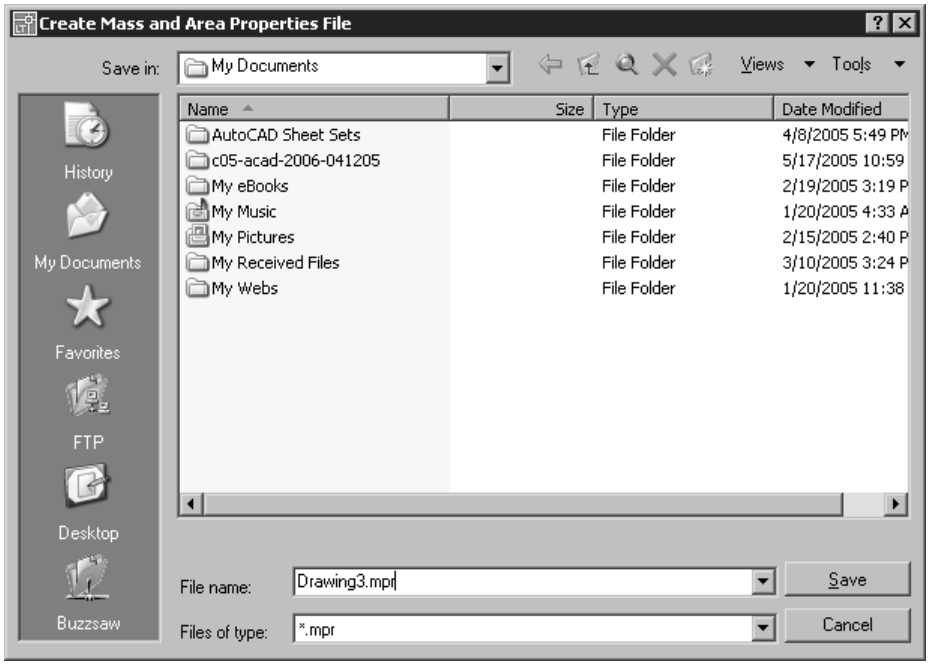

Figure 21-56 *The* ***Create Mass and Area Properties File*** *dialog box*

Moments of inertia. This property provides the mass moments of inertia of a region about the two axes. The equation used to calculate this value is given next.

area_moments_of_inertia = area_of_interest * (square of radius)

Products of inertia. The value obtained with this property helps to determine the force resulting in the motion of the object. The equation used to calculate this value is given next.

product _of_inertia YX,XZ = mass * dist centroid_to_YZ * dist centroid_to_XZ

Radii of gyration. The equation used to calculate this value is given next.

gyration_radii = $(\text{moments_of_inertia/body_mass})^{1/2}$

Principal moments and X-Y directions about centroid. This property provides you with the highest, lowest, and middle value for the moment of inertia about an axis passing through the centroid of the object.

© CADCIM Technologies, USA. For engineering services, contact sales@cadcim.com

MODIFYING PROPERTIES OF HIDDEN LINES

When you invoke the **HIDE** command, by default the hidden lines are suppressed and are not displayed in the surface or solid models. However, with AutoCAD, you can modify the hidden lines such that when you invoke the **HIDE** command, they appear as dotted lines and with a different color. This makes it extremely easy to visualize the object. The properties of the hidden lines can be modified using the **Hidden Lines Settings** dialog box. To invoke this dialog box, right-click in the drawing area and choose **Options** from the shortcut menu. The **Options** dialog box appears. Choose the **User Preferences** tab and then choose the **Hidden Line Settings** button to invoke the **Hidden Line Settings** dialog box shown in Figure 21-57.

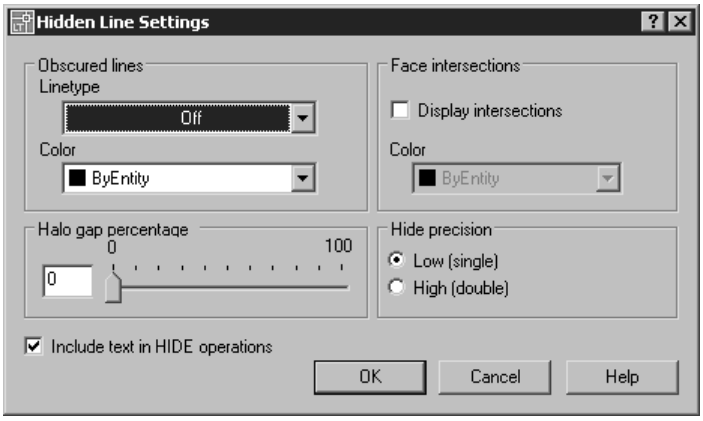

Figure 21-57 *The* ***Hidden Line Settings*** *dialog box*

Obscured lines Area

The options in this area are used to set the linetype and color of the hidden lines (also called obscured lines).

Linetype

The **Linetype** drop-down list is used to set the linetype for the obscured lines. You can select the desired linetype from this drop-down list. The linetype of the hidden lines can also be modified using the **OBSCUREDLTYPE** system variable. The default value of this variable is 0. As a result, the hidden lines are suppressed when you invoke the **HIDE** command. You can set any value between 0 and 11 for this system variable. Figure 21-58 shows a model with hidden linetype changed to dashed and Figure 21-59 shows the same model with hidden lines changed to dotted.

Color

The **Color** drop-down list is used to define color for the obscured lines. If you define a separate color, the hidden lines will be displayed with that color when you invoke the **HIDE** command. You can select the required color from this drop-down list. This can also be done using the **OBSCUREDCOLOR** system variable. Using this variable, you can define the color that you want to assign to the hidden lines. The default value of this variable is 257. This value corresponds

© CADCIM Technologies, USA. For online training, contact sales@cadcim.com

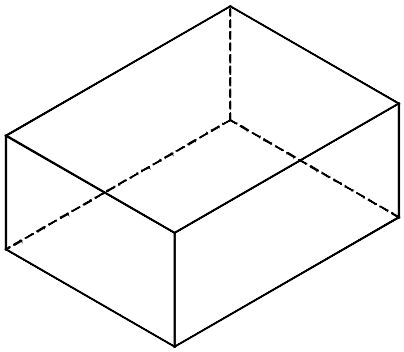

Figure 21-58 *Model with hidden lines changed to dashed*

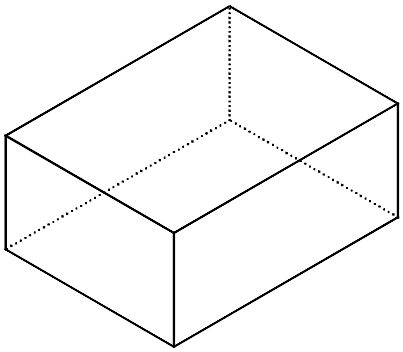

Figure 21-59 *Model with hidden lines changed to dotted*

to the **ByEntity** color. You can enter the number of any desired color at the sequence that will follow when you enter this system variable. For example, if you set the value of the **OBSCUREDLTYPE** variable to 2 and that of the **OBSCUREDCOLOR** to 1, the hidden lines will appear in red dashed lines when you invoke the **HIDE** command.

Note

*The linetype and color for the hidden lines defined using the previously mentioned variables are valid only when you invoke the **HIDE** command. They do not work if the model is regenerated.*

Face intersections Area

The options in the **Face intersections** area are used to display a 3D curve at the intersection of two surfaces. These options are discussed next.

Display intersections

If the **Display intersections** check box is selected, a 3D curve will be displayed that will define the intersecting portion of the 3D surfaces or solid models.

Color

The **Color** drop-down list is used to specify the color of the 3D curve that is displayed at the intersection of 3D surfaces or solid models.

Halo gap percentage Area

The **Halo gap percentage** area is used to specify in terms of percentage the distance by which the lines that lie behind a surface or solid model will be shortened, see Figures 21-59 and 21-60. You can specify the distance in the edit box or using the slider.

Note

The obscured linetype in Figures 21-60 and 21-61 is changed to dashed.

© CADCIM Technologies, USA. For engineering services, contact sales@cadcim.com

© CADCIM Technologies, USA. For online training, contact sales@cadcim.com

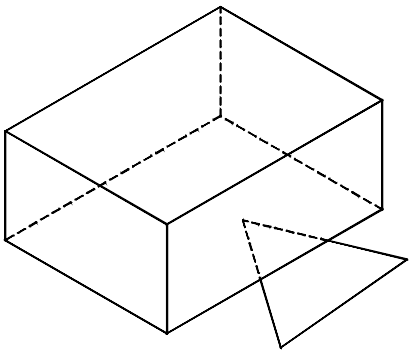

Figure 21-60 Hiding the lines with halo gap percentage as 0

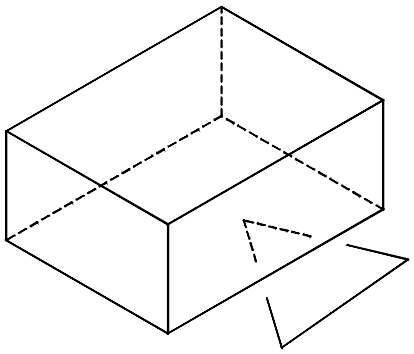

Figure 21-61 Hiding the lines with halo gap percentage as 40

Hide precision Area

The **Hide precision** area is used to define the precision of the hidden lines. You can select the **Low (single)** radio button to set the hide precision to single. Similarly, you can select the hide precision to double by selecting the **High (double)** radio button.

Include text in HIDE operations

The **Include text in HIDE operations** check box is selected to hide the text that lies behind a surface or solid model when the **HIDE** command is invoked. If this check box is cleared, the text will not be hidden when you invoke the **HIDE** command, even if lies behind a surface or a solid model.

Figure 21-62 shows a solid model with a text. Notice that when you invoke the **HIDE** command, the text is also hidden. But as the obscured linetype is changed to dashed, the text appears in dashed lines. Figure 21-63 shows the same model with **Include text in HIDE operations** check box cleared. Notice that the text is not hidden and is displayed with continuous lines.

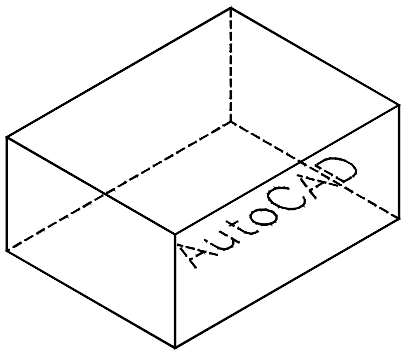

Figure 21-62 Text included while hiding the hidden lines

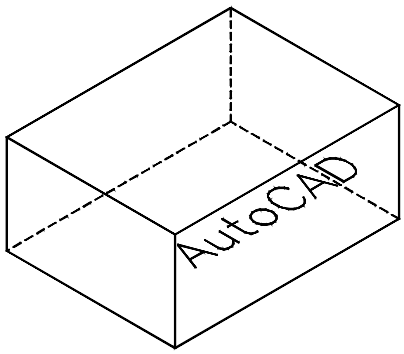

Figure 21-63 Text excluded while hiding the hidden lines

Self-Evaluation Test

Answer the following questions and then compare your answers to those given at the end of this chapter.

1. The **DDVPOINT** command is used to change the viewpoint to view the solid model. (T/F)
2. The 1x mark (default position) corresponds to the scale factor of 1. (T/F)
3. When you move the slider bar to 16x mark, the scale factor is 8 times. (T/F)
4. You can draw a 3D polyline in space using the **PLINE** command. (T/F)
5. The _____ and the _____ commands can be used to change the viewpoint for viewing the models in the 3D space.
6. Changing the viewpoint moves the 3D model from its default position. (T/F)
7. The **DDVPOINT** command allows you to set the viewpoint with respect to _____ and _____.
8. The various types of 3D coordinate systems are _____.
9. The line formed between the target and the camera is known as _____, or _____.
10. The _____ option allows you to shift from parallel viewing to perspective viewing.

Review Questions

Answer the following questions.

1. You can perform Boolean operations on the regions. (T/F)
2. The **ELEV** command is a transparent command. (T/F)
3. You can directly write a text with thickness. (T/F)
4. Negative value for the elevation shifts the workplane in *X* axis direction. (T/F)
5. Which command is used to create a three-dimensional polyline?

   (a) **POLYLINE** (b) **3DPOLY**
   (c) **3DPOLYLINE** (c) **POLY3D**

© CADCIM Technologies, USA. For engineering services, contact sales@cadcim.com

6. Which command is used for setting the elevation and thickness for new objects?

   (a) **ELEVATION** (b) **THICKNESS**
   (c) **ELEV** (d) **THICK**

7. Which command is used to suppress the hidden edges in the 3D model?

   (a) **SUPPRESS** (b) **HIDE**
   (c) **3DHIDE** (d) **EDGE**

8. When you open a new drawing, you are by default in which view?

   (a) SE Isometric View (b) SW Isometric View
   (c) Plan View (d) Bottom View

9. Which system variable has to be modified so that the ellipse should be drawn with thickness?

   (a) **ELLIPSEP** (b) **ELLIPSER**
   (c) **RELLIPSE** (d) **PELLIPSE**

10. The _____ command is used to suppress the display of the edges that lie behind the other object.

11. To draw an ellipse with thickness you have to set the value of the _____ system variable to _____.

12. The _____ system variable is used to define the color of the hidden lines.

13. The _____ system variable is used to define the linetype of the hidden lines

14. The mass properties of a region can be written to a file with an extension of _____.

15. You can define your own block that can be used in the **DVIEW** command. This block can be defined using the _____ command.

© CADCIM Technologies, USA. For online training, contact sales@cadcim.com

Exercises

Exercises 4 through 6

General

In these exercises, you will create the models shown in Figures 21-64 through 21-66. Assume the missing dimensions for the models.

Hints:
Draw the wireframe models and then convert them into regions using the **REGION** command. Hide them to get the display similar to the one shown in the figures.

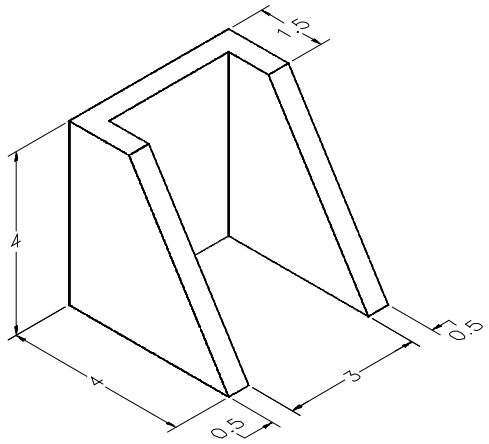

Figure 21-64 *Model for Exercise 4*

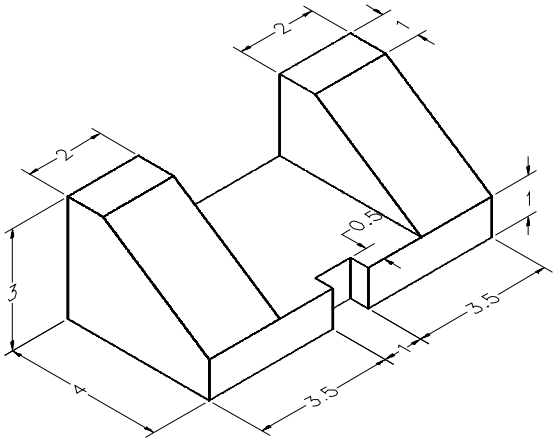

Figure 21-65 *Model for Exercise 5*

© CADCIM Technologies, USA. For engineering services, contact sales@cadcim.com

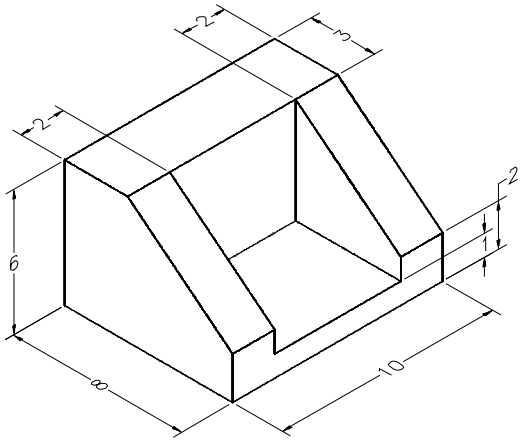

Figure 21-66 *Model for Exercise 6*

Problem Solving Exercise 1

General

In this you will create the computer shown in Figure 21-67. You can create the wireframe model and then convert it into regions to get the display similar to the one shown in figure. For you convenience, another image of computer is also shown in Figure 21-68. This figure shows all the lines including the hidden lines that are behind the visible surface. Take the dimensions of the computer you are working on.

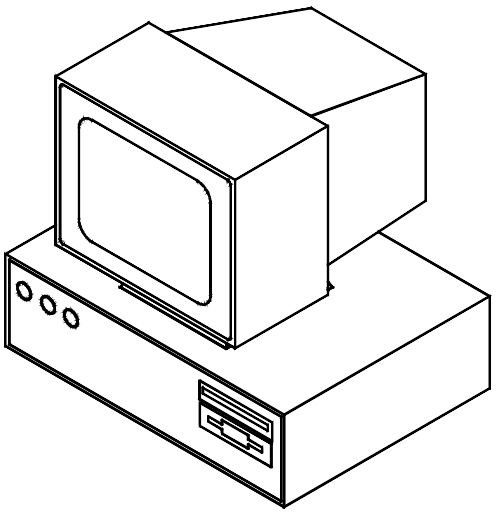

Figure 21-67 *Model for Problem Solving Exercise 1*

© CADCIM Technologies, USA. For online training, contact sales@cadcim.com

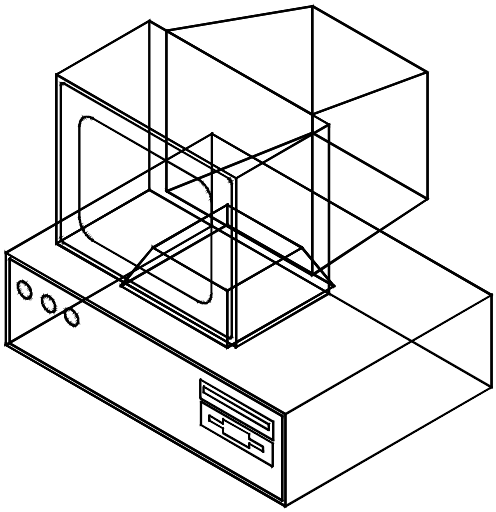

Figure 21-68 *Model for Problem Solving Exercise 1*

Answers to Self-Evaluation Test

1 - T, **2** - T, **3** - F, **4** - F, **5** - **DDVPOINT**, **VPOINT**, **6** - F, **7** - Angle in *XY* plane from *X* axis, Angle from *XY* plane, **8** - Absolute, Relative rectangular, Relative cylindrical, and Relative spherical, **9** - line of sight, view direction, **10** - **Distance**

© CADCIM Technologies, USA. For engineering services, contact sales@cadcim.com

AutoCAD LT Part III (Customizing)

Author's Web Sites

For Faculty: Please contact the author at **stickoo@calumet.purdue.edu** or **tickoo@cadcim.com** to access the Web site that contains the following.

1. **PowerPoint presentations, programs, and drawings used in this textbook.**
2. **Syllabus, chapter objectives and hints, and questions with answers for every chapter.**

For Students:You can download drawing-exercises, tutorials, programs, and special topics by accessing author's web site at **www.cadcim.com** or **http://technology.calumet.purdue.edu/met/tickoo/students/students.htm**.