Chapter 7

Turning Cycles

Learning Objectives

After completing this chapter, you will be able to:

- *Create profiles in the ZX environment.*
- *Select appropriate turning tools.*
- *Create a straight turning toolpath.*
- *Create a rough and finish turning toolpath.*
- *Create a rough and finish groove toolpath.*
- *Create a rough and finish side groove toolpath.*

TURNING ENVIRONMENT

Turning is a machining operation in which the excess material is removed from a rotary stock with a tool that moves in the linear and axial direction in the lathe. Unlike the milling operation, it uses a single point cutting tool. Components like bearings, fasteners, and shafts are manufactured by the turning operation. The turning environment in EdgeCAM generates a toolpath for the workpiece that can be machined in the CNC Lathe. The turning environment is invoked by choosing the **Turn** option from the **Discipline** drop-down list in the **New Sequence** dialog box. When you invoke the turning environment, the tools for the turning cycles become available in the menu bar. Also, a set of turning operations become available in the **Operations** toolbar. This toolbar will be discussed in the next chapter.

CREATING A PROFILE IN THE ZX ENVIRONMENT

The profile to generate a turning toolpath is created in the **ZX environment**. To invoke the **ZX environment**, choose **Options > ZX Environment** from the menu bar. Alternatively, you can also choose the **XY** button at the lower right corner of the status bar to invoke the **ZX environment**. The method and tools to create a profile are similar to those in the **XY environment**. The profile of the turned component is symmetric, and so you can draw one half of the sketch. Figure 7-1 shows the component to be created by the turning operation. Figure 7-2 shows the sketch drawn in the **ZX environment** to generate the toolpath.

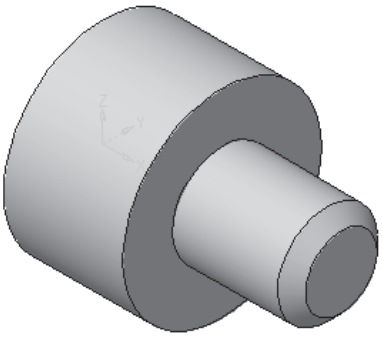

Figure 7-1 *Model to be created by turning*

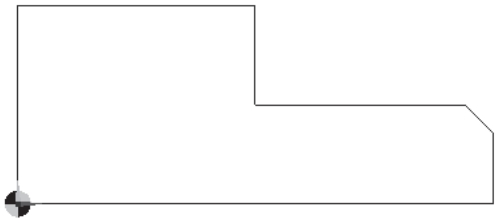

Figure 7-2 *Profile created in the turning environment*

Apart from creating a toolpath from one half of the sketch, you can also visualize the revolved component by sweeping it about the origin. After drawing the sketch, choose **View > Sweep** from the menu bar; the **Sweep** dialog box will be displayed, as shown in Figure 7-3. Enter the angle of revolution in the **End Angle** edit box. The number of the profiles to be repeated during a revolution is specified in the **Repeats** spinner. The options in the **CPL** drop-down list are used to select the axis in the selected CPL. Select the **Circles** check box to cap the ends. After setting the parameters, choose **OK**. You will be prompted to select the profile. Select the profile and right-click; the profile will be revolved about the origin. Figure 7-4 shows the model created by sweeping the profile shown in Figure 7-2 through an angle of 180-degrees.

Note

*If no value is specified in the **End Angle** edit box, the sketch will be revolved through an angle of 180-degrees.*

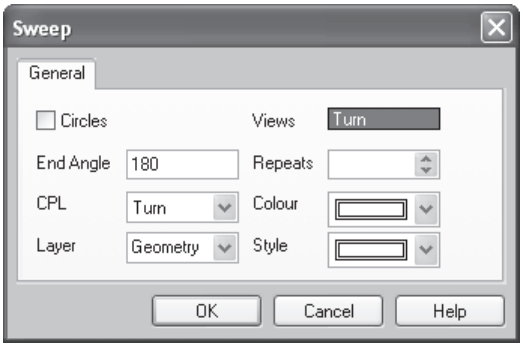

*Figure 7-3 The **Sweep** dialog box*

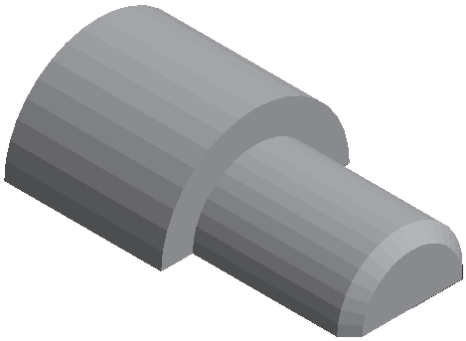

Figure 7-4 Model created by sweeping

If you create a profile in the **XY environment** and choose the **ZX environment**, the orientation of the sketch will be altered. To modify the orientation, choose **Edit > Transform > Transpose** from the menu bar; the **Transpose** dialog box will be displayed. Select the **XY-ZX** option from the **Transpose** drop-down list and choose **OK**. You will be prompted to select the profile. Select the sketch from the drawing area and right-click; the profile will be transposed. EdgeCAM provides two set of standard views, one for the **XY environment** and the other for the **ZX environment**. On choosing the **ZX environment,** you will observe that the orientation of the model is **Turn**. The equivalent standard views of that in the **XY environment** are given below.

XY environment	ZX environment
Top	Turn
Front	Inverse Turn
Right	Radial
Left	Axial
Isometric	Isometric

You can also import models that are created from other CAD packages by choosing **File > Insert > Solid** as in the **XY environment**. After you import solids, the axis of the solid can be made parallel to the origin by choosing the **Align Body For Turning** button from the **Solids** toolbar. Alternatively, you can also choose **Solids > Align Body for Turning** from the menu bar. On choosing the **Align for Turning** button from the **Solids** toolbar, you will be prompted to select the surfaces to be aligned. Select any one surface of the imported model; the model will be aligned.

CREATING STOCKS

Menu: Geometry > Stock/Fixture
Toolbar: Design > Stock/Fixture

In turning operations, the material is removed from the rotary stock. So, the stock created is cylindrical in shape. After drawing the profile in the **ZX environment**, create a stock by choosing the **Stocks/Fixtures** button from the **Design** toolbar. In the **Stock** dialog box, select the **Automatic Stock** check box and choose the **Cylinder** option from the

Evaluation Chapter. Do not copy. Visit www.cadcim.com for details

Shape drop-down list. Enter the required radial and linear offsets in the corresponding edit boxes in the **Cylinder Offset** area and choose the **OK** button. If the **Automatic Stock** check box is cleared, enter the radius of the stock in the **Radius** drop-down list and choose **OK**. In this case, you will be prompted to select two points representing the axis of the cylinder. Select the two points from the drawing area; a stock of cylindrical shape will be created in the wireframe mode. In the turning environment, you will find a new option, **Turn Billet** in the **Shape** drop-down list. Select this option if you have to machine a component created by casting or forging. On selecting the **Turn Billet** option from the **Shape** drop-down list and choosing the **OK** button, you will be prompted to select the entities. Select the entities from the drawing area and right-click. The selected entities will be converted into a billet. Figure 7-5 shows the automatic stock created for the profile shown in Figure 7-2. Figure 7-6 shows the isometric view of the profile and the stock created.

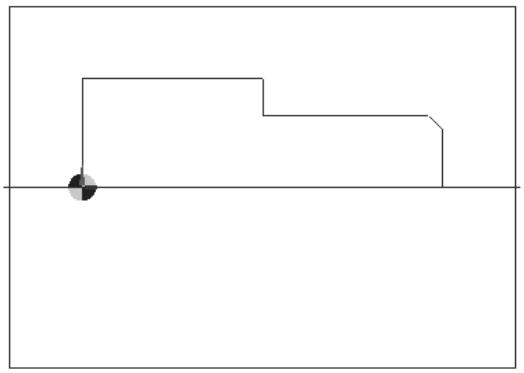

Figure 7-5 *Profile with the stock created*

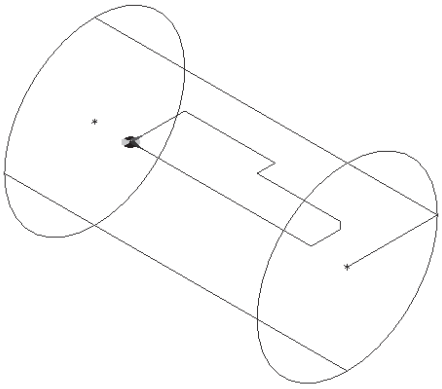

Figure 7-6 *Isometric view of the stock created*

Note

To create a transparent stock, choose the ***Properties*** *option from the view caption. In the* ***Configure View*** *dialog box, select the* ***Translucent Stock*** *check box. After creating the transparent stock, you can toggle between the wireframe mode by choosing the* ***Toggle Stock*** *button from the* ***Display*** *toolbar.*

GENERATING SEQUENCES

After creating the stock, choose the **Switch to Manufacture Mode** button from the top right-end corner of the screen. On entering the manufacture mode for the first time, you will be prompted to define the sequence. In the **Machine Sequence** dialog box, select the **Turn** option from the **Discipline** drop-down list. The other options in the **General** tab are the same as discussed in the milling environment. The options in the **Lathe Setup** tab will be available only when you select the **Turn** option from the **Discipline** drop-down list. The **Machining Sequence** dialog box with the options in the **Lathe Setup** tab is shown in Figure 7-7.

Based on the option selected in the **Machine Tool** drop-down list, the options in the **Lathe Setup** tab are filtered. Select the **Mirror View** check box to mirror the profile along the horizontal axis. The distance from the machine datum to the chuck face is entered in the **Datum**

to Chuckface drop-down list. Based on the option selected in the **Machine Tool** drop-down list; a default distance will be set in this drop-down list. To change the distance, select the **Digitise** option from the drop-down list and select the position in the drawing area. The **Part Stick Out** edit box is used to specify the length of the workpiece outside the chuck. After specifying the parameters, choose **OK**. If the **Digitise** option has been selected in the **Datum to Chuckface** drop-down list, you will be prompted to select the geometry for the main spindle chuck geometry. Select the profile in the drawing area and right-click.

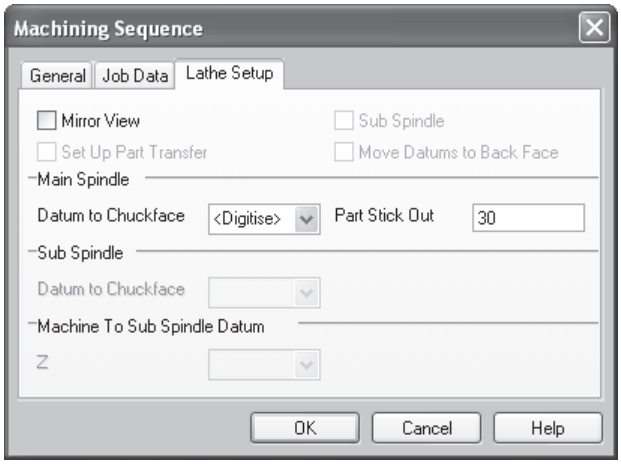

Figure 7-7 *The* ***Machining Sequence*** *dialog box with the* ***Lathe Setup*** *tab chosen*

IMPORTANT TOOLING PARAMETERS

Menu:	Tooling > Turn/Thread/Bore/Groove/Parting Off
Toolbar:	Turn Tools > Turn/Thread/Bore/Groove/Parting Off

Before generating a toolpath, a cutting tool has to be selected for a particular machining cycle. The set of cutting tools used in the turning cycles are in the **Main** toolbar. The tool last selected will be displayed with a down arrow. Click the down arrow and drag the **Turn Tools** toolbar from the **Main** toolbar. The dislodged **Turn Tools** toolbar is shown in Figure 7-8.

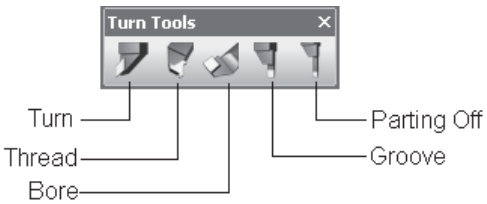

Figure 7-8 *The* ***Turn Tools*** *toolbar*

Evaluation Chapter. Do not copy. Visit www.cadcim.com for details

To select a tool for the turning cycle, choose the **Turn** button from the **Turn Tools** toolbar; the **Turning Tool** dialog box will be displayed, as shown in Figure 7-9. The tool position in the turret is specified in the **Position** spinner. You can select a predefined cutting tool or specify the dimensions of the cutting tool. The procedure to select a cutting tool is discussed next.

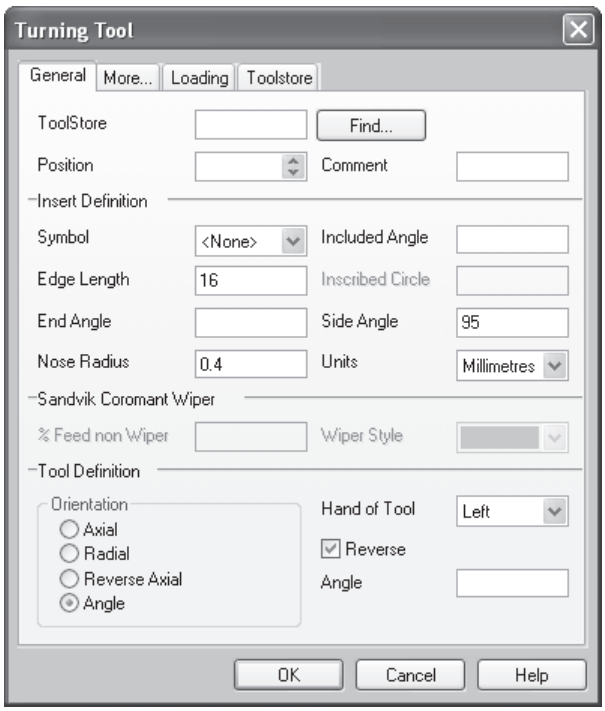

Figure 7-9 *The* ***Turning Tool*** *dialog box*

Selecting a Predefined Tool

Insert tools are available in different shapes and sizes. Some of them are standardized and others depend on the design of the manufacturers. EdgeCAM provides you a set of standard tool shapes. To select a predefined tool, choose the **Find** button; the **Toolstore** window will be displayed. Select a tool and choose the **Select** button; the selected tool will be displayed in the **ToolStore** edit box. In the **Toolstore** window, there are four types of tool shapes. These are discussed next.

S Square

This is used for rough turning. It cannot be used for creating square shoulders.

C 80 Rhombic

This is an all purpose turning tool.

D and V 55 Rhombic

This is used for profiling and finish passes.

Defining Tool Parameters

Apart from selecting the predefined tool, you can also specify its dimensions in the **Insert Definition** area. The options used to define the tool parameters are discussed next.

Symbol

The shape is specified in terms of standardized ISO symbols. Select an appropriate option from the **Symbol** drop-down list.

Included Angle

The included angle is the angle between the end and the side of the tool. This edit box will be available if you select the **None** option from the **Symbol** drop-down list. Usually, larger the included angle of the insert, the greater is the strength of the tool.

Edge Length

This edit box is used to specify the length of the cutting edge.

Inscribed Circle

This edit box will be available if no value is entered in the **Edge Length** edit box. It specifies the radius of the imaginary circle drawn inside the four sides of the tool and also tangent to the sides.

End Angle

The angle between the end cutting edge and a line perpendicular to the shank of the tool is entered in the **End Angle** edit box.

Side Angle

The angle between the side cutting edge and the side of the tool shank is entered in the **Side Angle** edit box.

Nose Radius

The radial dimension at the intersection of the side cutting edge and the end cutting edge is entered in the **Nose Radius** edit box.

Orientation Area

The position of the tool relative to the axis of the workpiece is decided by selecting the option from the **Orientation** area. Select the **Axial** radio button to place the tool parallel to the axis. The **Radial** radio button is selected to position the tool normal to the axis of the workpiece. To place the tool at an angle, the **Angle** radio button is selected. The angle is entered in the **Angle** edit box.

Loading Tab

Choose the **Loading** tab, enter the distance of the cutting edge from the machine datum along the X, Y, and Z axes in the **X Gauge**, **Y Gauge,** and **Z Gauge** edit boxes, respectively. Enter the dimensions of the tool shank in the **Length**, **Width**, and **Depth** edit boxes in the **Shank Definition** area.

Evaluation Chapter. Do not copy. Visit www.cadcim.com for details

IMPORTING SOLIDS

Menu: File > Insert > Solid

In the turning environment, you can also work with the solids created in the other CAD packages. To import the solids, choose **File > Insert > Solids** from the menu bar; the **Insert Solid File** dialog box will be displayed, as shown in Figure 7-10. Select the solid, as described in the previous chapter, by choosing the **Browse** button. After inserting the solid, you need to align it in such a way that the axis of the solid is parallel to the **Z** axis (horizontal axis). To align the solid, choose the **Align Body for Turning** button from the **Solids** toolbar. You can also choose **Solids > Align Body for Turning** from the menu bar. On choosing the **Align Body for Turning** button, you will be prompted to select the solid body. Select the surface that has the axis of rotation; the solid body will be aligned parallel to the horizontal axis. Figure 7-11 shows the solid body imported from another software package. Figure 7-12 shows the solid body after aligning.

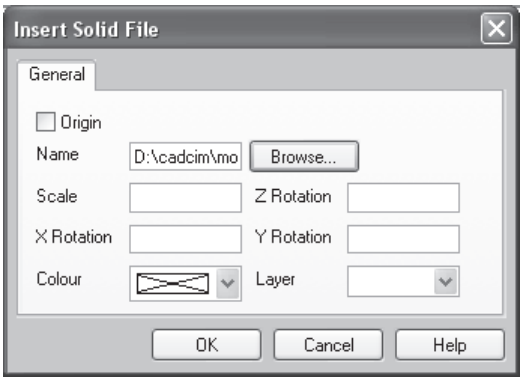

Figure 7-10 *The* ***Insert Solid File*** *dialog box*

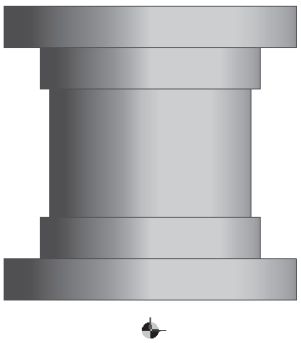

Figure 7-11 *Imported solid*

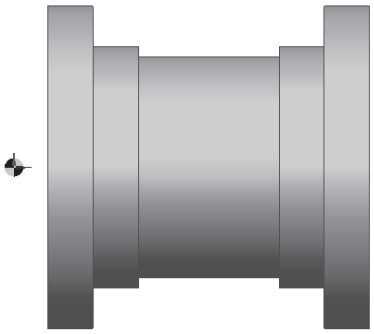

Figure 7-12 *Solid after aligning to the horizontal axis*

FINDING FEATURES

Menu: Solids > Feature Finder
Toolbar: Solids > Feature Finder

After you import the solid, you can fine the features manually or automatically. To identify the features automatically, choose the **Feature Finder** button from the **Solids** toolbar; the **Feature Finder** dialog box will be displayed, as shown in Figure 7-13. Select the **Envelopes** check box to create the outline that covers the maximum features. If you select the **Lower Turret** check box, the profile will be available in the lower turret also. Choose the **Display** tab to define the layers and the color of the identified features. Choose the **OK**

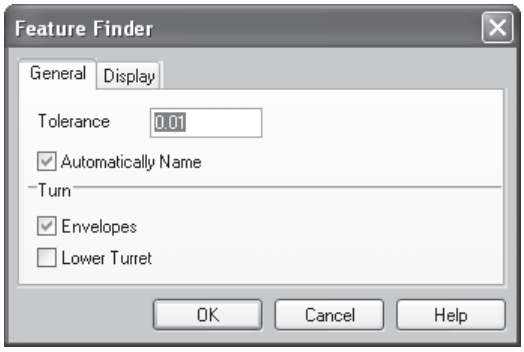

*Figure 7-13 The **Feature Finder** dialog box*

button; the features will be displayed. The features are created in the new layers and are displayed in the **Layers** window.

TURNING CYCLE

Common operations that are performed on lathe are simple turning, facing, grooving, parting off, threading, and so on. The procedures to create a toolpath for these machining operations are discussed next.

Creating the Straight Turning Toolpath

Menu:	Turn Cycles > Straight Turn
Toolbar:	Turn > Straight Turn

Straight turning, also called Facing, is the operation of finishing the ends of the workpiece to make it flat and smooth. Here, the tool moves in the radial direction while the workpiece is rotating. After selecting the cutting tool, choose the **Straight Turn** button from the **Turn** toolbar; the **Straight Turning** dialog box will be displayed, as shown in Figure 7-14.

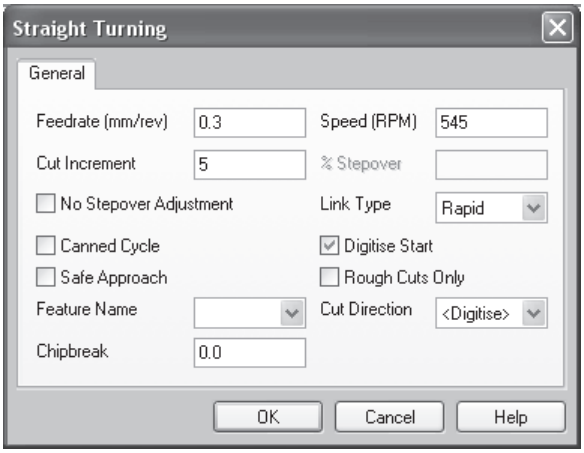

*Figure 7-14 The **Straight Turning** dialog box*

Evaluation Chapter. Do not copy. Visit www.cadcim.com for details

Specify the feedrate and the spindle speed in the corresponding edit boxes. Enter the amount of material to be removed in each pass of the tool in the **Cut Increment** edit box. The distance between the two cuts is entered in the **% Stepover** edit box. The distance is measured in terms of the percentage of length of the cutting edge of the tool. You can enter the values in the **Cut Increment** or the **% Stepover** edit box. Based on the values entered in these edit boxes, the system calculates and averages the cut in such a way that an equal amount of material is cut in each pass. If it is not required, select the **No Stepover Adjustment** check box. The speed at which the tool moves to the initial position after the end of the cycle is specified by selecting an option from the **Link Type** drop-down list. The options in the drop-down list are **Rapid** and **Feed**. Select the **Digitise Start** check box to specify the start point of the cut. If this check box is not selected, the cut will start from the initial position of the tool. If you select the **Rough Cuts Only** check box, the tools return to the initial position rapidly in the path used to cut the material. If this check box is cleared, the tool returns to the initial position by tracing the path of the previous cut. Select the **Safe Approach** check box to move the tool in the defined path before starting the cut. Enter a name for the feature, if required, in the **Name** drop-down list. Select the direction of the cut from the **Cut Direction** drop-down list. The options in the drop-down list are **Digitise**, **Face**, and **Turn**. For the facing operation, select the **Face** option from the drop-down list. After selecting all the parameters, choose **OK**. You will be prompted to select the cycle start position and cycle end position in succession. Select the positions from the drawing area and right-click. The straight turning toolpath (Facing) will be generated, as shown in Figure 7-15.

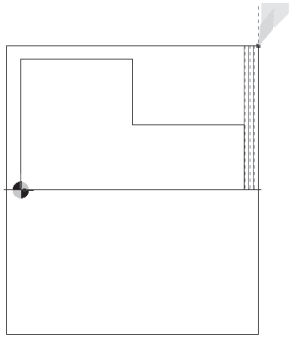

Figure 7-15 *Straight turning toolpath generated*

Creating the Rough Turning Toolpath

Menu:	Turn Cycles > Rough Turn
Toolbar:	Turn > Rough Turn

Rough turning is the first operation that needs to be performed on the workpiece of irregular shapes. The workpiece can be of a complex profile created from casting or forging operations. To generate the rough turning toolpath, choose the **Rough Turning** button from the **Turn** toolbar; the **Rough Turning** dialog box will be displayed, as shown in Figure 7-16.

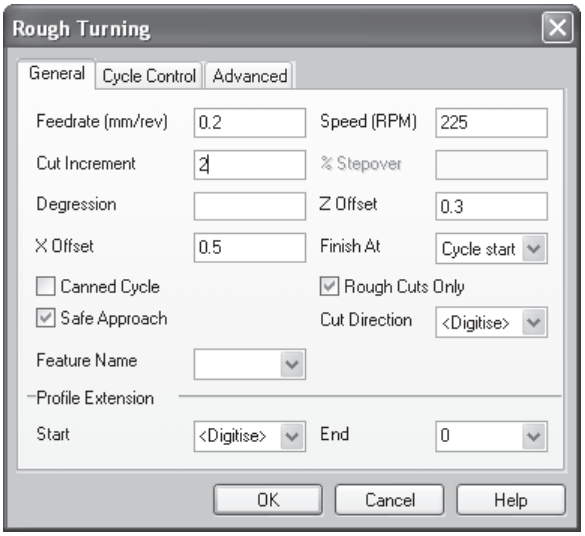

*Figure 7-16 The **Rough Turning** dialog box*

General Tab

Enter the feedrate and the spindle speed in the corresponding edit boxes. Enter the cut increment or the percentage stepover parameter to define the amount of material to be cut in each pass. The **Degression** check box is used to specify any further reduction in the cut increment. The **Z Offset** and the **X Offset** edit boxes are used to specify the toolpath offset to the profile boundary in the horizontal and vertical directions, respectively. The **Finish At** drop-down list is used to specify the position of the tool after the end of the operation. The options in the drop-down list are **Cycle Start** and **Cycle End**. The drop-down lists in the **Profile Extension** area are used to extend the toolpath from the start point and the endpoint of the profile. If no value is specified in the drop-down list in this area, the cutting tool will move from the start point of the cut to the end of the profile.

Cycle Control Tab

The options in the **Cycle Control** tab are used to modify the path and specify how the cutting tool will advance and withdraw before and after the cut. The schematic representation of the parameters in the **Cycle Control** tab are shown in Figure 7-17. The **Retract Angle** edit box is

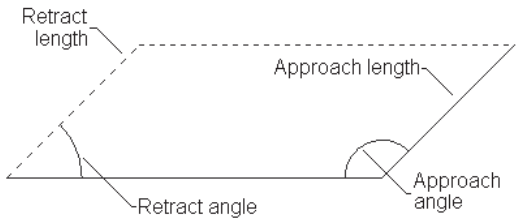

*Figure 7-17 Parameters in the **Cycle Control** tab*

Evaluation Chapter. Do not copy. Visit www.cadcim.com for details

used to specify the angle that the tool will follow during withdrawal. The **Retract Length** edit box is used to specify the distance that the tool has to move before it starts moving toward the cycle start point. The **Approach Angle** edit box is used to specify the angle that the tool will follow during an advance. You need to specify both the angle and the length values for a parameter. If the component is lengthy, the workpiece may complete one revolution before the tool reaches the start point. In that case, some material will be left uncut. This is handled by entering a value in the **Dwell Revolution** edit box.

Advanced Tab

In each pass, the material is removed to the amount specified in the **Cut Increment** or the **% Stepover** edit boxes. The system calculates the distances and their average in such a way that the material is removed in equal amount in each pass. If this is not required, select the **No Stepover Adjustment** check box. After the cut is over, the tool retracts to the initial position based on the options selected in the **Link type** drop-down list. If the **Rapid** option is selected, the tool retracts rapidly. If the **Feed** option is selected, the tool retracts with the speed equal to the feedrate. The options in the **Corner Type** drop-down list are used to select the corner type required. The options in the drop-down list are **Round** and **Sharp**. If you select the **Select by Region** check box, during an entity selection, you will be prompted to select the start and endpoint of the cut region.

After specifying all the parameters, choose **OK**. You will be prompted to select the profile of the geometry. Select the profile individually by left-clicking on the entity or by drawing a selection box. Right-click after completing the selection. You will notice two stars at both ends of the selected profile. To modify the start point and the endpoint of the cut, select one of the stars and place it at the required start point. Next, select the second star and place it at the required endpoint of the cut and right-click. You will be prompted to select the start point of the cut. Select a position from the drawing area. If you have selected the direction of the cut in the **Cut Direction** drop-down list, the toolpath will be generated. Else, you will notice an arrow at the start point of the cut. To perform a turning operation, left-click near the horizontal arm. To perform a facing operation, left-click near the vertical arm. After selecting the direction of the cut, right-click; the toolpath will be generated, as shown in Figure 7-18.

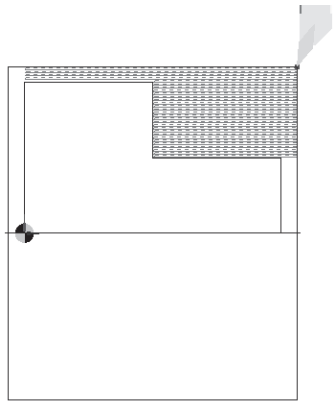

Figure 7-18 *Rough turning toolpath created*

Generating the Turning Toolpath for Finishing

Menu:	Turn Cycles > Finish Turn
Toolbar:	Turn > Finish Turn

Finish turning is a material removal process that is used to create the final product or the pre-final product. In this process, the material removal is minimum. Select the appropriate tool to generate the Finish turn from the **Turn Tools** toolbar. After selecting the tool, choose the **Finish Turn** button from the **Turn** toolbar; the **Finish Turning** dialog box will be displayed, as shown in Figure 7-19.

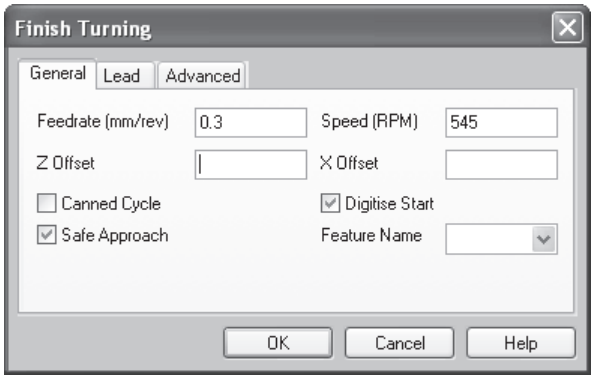

Figure 7-19 *The* ***Finish Turning*** *dialog box*

General Tab

The options in the **General** tab have been discussed earlier. Enter the feedrate and the spindle speed in the corresponding edit boxes. If you need an offset in the toolpath along the Z and X axes, enter the offset distance in the **Z Offset** and the **X Offset** edit boxes, respectively. Select the **Digitise Start** check box to select the starting position of the cut. If the **Digitise Start** check box is not selected, the cut will start from the start point of the selected profile. Select the **Safe Approach** check box to move the tool in the defined path.

Lead Tab

The options in the **Lead** tab are used to define the tool advancement and withdrawal. If you want the tool to approach and retract at an angle, specify the angular value in the **Angle In** and **Angle Out** edit boxes. If you want the tool to approach and retract by tracing an arc, the radius of the arc should be entered in the **Radius In** and the **Radius Out** edit boxes. Enter a value in the **Length In** and the **Length Out** edit boxes to define the approach and retract length. The drop-down lists in the **Profile Extension** areas are used to extend the toolpath from the start point and endpoint of the profile. Enter a value in the drop-down list or select the **Digitise** option to select the positions from the drawing area.

Tip. *To select the position, press X and specify the Cartesian coordinates*.

Evaluation Chapter. Do not copy. Visit www.cadcim.com for details

Advanced Tab

The options in the **Corner Type** drop-down list are used to select the type of corner required after machining the edges. The options in the drop-down list are **Round** and **Sharp**. If you select the **Select by Region** check box, you will be prompted to select the start point and the endpoint of the cut region. Select the points from the drawing area and right-click to terminate the selection.

After you specify all the parameters, choose **OK**; you will be prompted to select the profile. Select the profile individually by left-clicking or by drawing a selection box. Right-click to end the selection. You will notice an arrow at one of the ends. You will also be prompted to select the start point of the cycle. Right-click to accept the default position. To change the position, left-click at the other end; the start point of the cycle will be changed. Right-click to accept the new position; a star will appear at the other end, indicating the endpoint of the tool travel. To alter the start and end positions, left-click again near the arrow and place it at the required position by dragging the mouse. Also, left-click near the star and place it at the required position by dragging, and then right-click. If the **Digitise Start** check box is not selected in the **General** tab, the toolpath will be generated. If the check box is selected, you will be prompted to select the start point. Select the point from the drawing area and right-click to generate the toolpath, as shown in Figure 7-20.

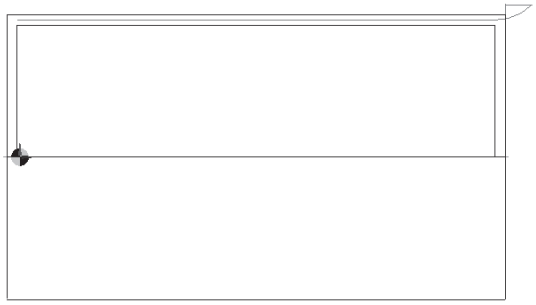

Figure 7-20 *Finish turn toolpath*

GENERATING A TOOLPATH FOR THE GROOVES

The turning of grooves is a process of creating a groove or a neck to terminate a thread or to provide a clearance for the mating surfaces. The grooves can be created using a square, round, or the form tool. For the grooves that cannot be created using the form tools, first the rough cut is performed, followed by the finish groove. In EdgeCAM, you can create external or internal grooves. Also, you have four machining cycles, **Rough Groove**, **Finish Groove**, **Rough Side Groove**, and **Finish Side Groove**. In the **Turn** toolbar, you will notice a down arrow next to the **Rough Groove** button. Click the arrow and detach the toolbar. The detached **Groove Cycles** toolbar is shown in Figure 7-21.

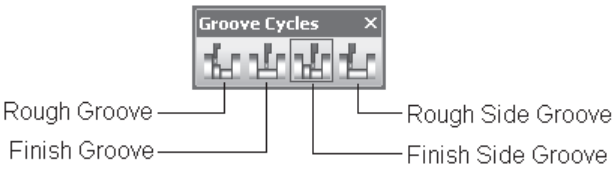

Figure 7-21 *The* ***Groove Cycles*** *toolbar*

Generating the Toolpath for Rough Grooves

Menu:	Turn Cycles > Rough Groove
Toolbar:	Groove Cycles > Rough Groove

First you need to select the cutting tool for the grooving cycle. To do so, choose the **Groove** button from the **Turn Tools** toolbar; the **Grooving Tool** dialog box will be displayed. Select the predefined tool by choosing the **Find** button or define the tool parameters, as discussed earlier in this chapter. To create a groove on the face of the component, select the **Side** radio button from the **Type** area. Else, select the **End** radio button. The **Reach** edit box in the **Tool Definition** area is used to specify the length of the cutting tool. After specifying the parameters, choose **OK**. To create the toolpath, choose the **Rough Groove** button from the **Grooving Cycles** toolbar; the **Rough Grooving** dialog box will be displayed, as shown in Figure 7-22.

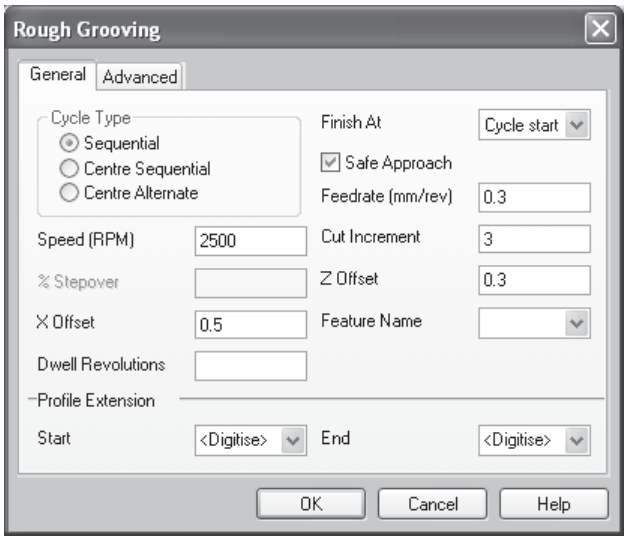

Figure 7-22 *The* ***Rough Grooving*** *dialog box*

General Tab

Enter the feedrate and the spindle speed in the corresponding edit boxes. Enter the distance to be moved by the tool in each cut in the **Cut Increment** or the **% Stepover** edit box. If the cut has to be finished at a distance from the profile, the offset distance along the Z axis and X axis should be entered in the **Z Offset** and **X Offset** edit boxes, respectively. The number of revolutions of the workpiece for which the tool has to remain idle, is entered in the **Dwell Revolution** edit box. The final position of the tool, after the cut, is based upon the options selected in the **Finish At** drop-down list. The options in the drop-down list are **Cycle Start** and **Cycle End**. Select the required radio button in the **Cycle Type** area to select the tool movement. The options in the **Cycle Type** area are discussed next.

Sequential

Select this radio button to move the tool from one end to the other end.

Evaluation Chapter. Do not copy. Visit www.cadcim.com for details

Center Sequential
When this radio button is selected, the cut will start from the center and move toward one edge. Next, the material will be removed from the other half.

Center Alternate
When this radio button is selected, the tool will first remove the material from the center and then create a cut in the alternate direction.

The drop-down lists in the **Profile Extension** area are used to extend the toolpath from the start point and endpoint of the profile.

Advanced Tab

After the cut is created, the tool retracts to the initial position, based on the option selected in the **Link type** drop-down list. The options in this drop-down list are **Rapid** and **Feed**. Based on the type of corner required after machining the edges, select the option in the **Corner Type** drop-down list. The options in the drop-down list are **Round** and **Sharp**. The depth of the cut for each pass is given in the **Peck Increment** edit box. If you select the **Apply To First Cut Only** check box, the depth of the cut will be applied for the first cut only. Select the **No Peck Adjustment** check box to avoid the averaging of cuts. Select the **Select By Region** check box to select the start point and the endpoint of the cut region.

After specifying all the parameters, choose **OK**; you will be prompted to select the profile. Select the profile from the drawing area by left-clicking or by drawing a selection box. Right-click to complete the selection. Next, you will be prompted to digitise the start and the end of the cut. Click near the star and place it at the required position by dragging the mouse and then right-click. Next, digitise the start point of the cut by selecting a position from the drawing area. You will notice an arrow with the longer arm facing downward and the shorter arm facing toward the right. The longer arm indicates the drive and the shorter arm indicates the cut direction. To change the cut direction, click on the left side of arrow. Else, right-click to accept the direction; the toolpath will be generated, as shown in Figure 7-23.

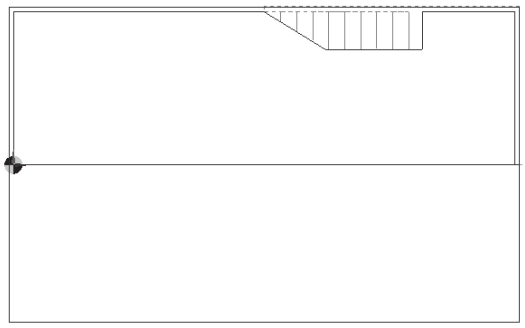

Figure 7-23 *Rough groove toolpath generated*

Creating the Finish Groove Toolpath

Menu:	Turn Cycles > Finish Groove
Toolbar:	Groove Cycles > Finish Groove

After creating the toolpath to generate the rough groove, you need to turn the groove for finishing by choosing the **Finish Groove** button in the **Groove Cycles** toolbar. Choose the **Groove** button from the **Turn Tools** toolbar and select a tool, as discussed in the **Rough Groove** cycle. Next, choose the **Finish Groove** button from the **Groove Cycles** toolbar; the **Finish Grooving** dialog box will be displayed, as shown in Figure 7-24. The options in this dialog box are discussed next.

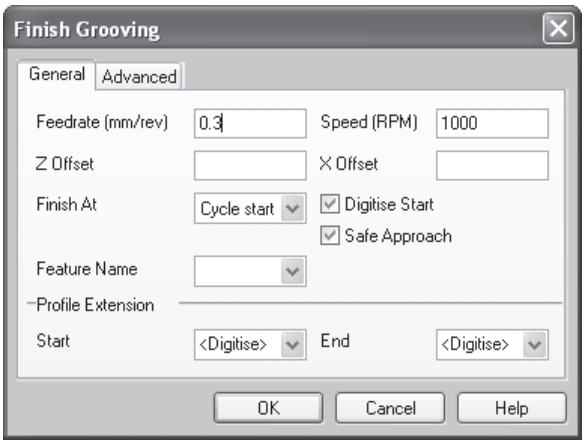

Figure 7-24 *The* ***Finish Grooving*** *dialog box*

General Tab

Enter the feedrate and the spindle speed in the respective dialog boxes. To terminate the cut at a distance from the profile, enter the offset distance in the respective edit boxes. To position the tool at the initial position after the cut, select the **Cycle Start** option from the **Finish At** drop-down list. If you select the **Cycle End** option from the drop-down list, the tool will rest at the end after cutting. Select the **Digitise Start** check box to select a starting position from the drawing area. Select the **Safe Approach** check box to advance the tool in the defined path. The drop-down lists in the **Profile Extension** area are used to extend the toolpath from the start point and endpoint of the profile.

Advanced Tab

The options in the **Corner Type** drop-down list are used to select the type of corner to be created after machining the edges. The options in this drop-down list are **Round** and **Sharp**. If you select the **Select by Region** check box, you will be prompted to select the start point and the endpoint of the cut region during the selection of the entity.

After entering the parameters, choose **OK**. You will be prompted to select the profile. Select the profile from the drawing area and right-click. You will be prompted to digitise the start point and the endpoint of the cut. Click near the star point and place it at the required position by

Evaluation Chapter. Do not copy. Visit www.cadcim.com for details

dragging the mouse. Next, right-click and select the start position of the cycle; the toolpath will be generated, as shown in Figure 7-25.

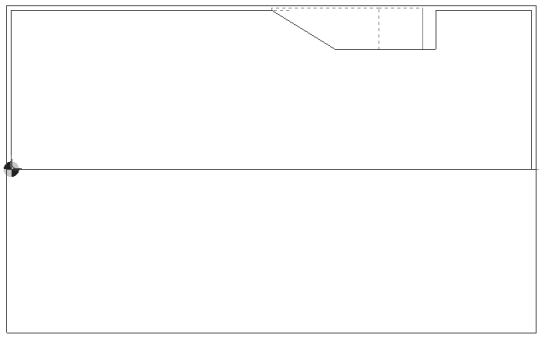

Figure 7-25 *Finish groove toolpath generated*

Creating the Rough Side Groove Toolpath

Menu:	Turn Cycles > Rough Side Groove
Toolbar:	Groove Cycles > Rough Side Groove

When you create a groove using the normal groove tool, the tool may fail because of the high cutting speed or the improper depth of the cut. To prevent this, you can choose the side groove tool with a defined length, width, and nose radius. You can also choose the **Rough Side Groove** cycle. In the side groove, the tool moves a little in the radial direction and removes the material. Next, it retracts and removes the material from the axial direction. To remove material using this cycle, choose the **Rough Side Groove** button from the **Groove Cycles** toolbar; the **Rough Side Groove** dialog box will be displayed, as shown in Figure 7-26. The options in this dialog box are described next.

General Tab

Select the **Digitise Start** check box to select the start point from the drawing area. If this check box is cleared, the cut will start from the tool location specified while selecting the tool. Select the **Safe Approach** check box to move the tool in the defined toolpath. To terminate the cut at a distance from the profile, enter the offset distance along the **Z** and **X** directions in the **Z Offset** and **X Offset** edit boxes, respectively. The rate at which the material is removed during the radial and the axial cut, is entered in the **Side Feed (mm/rev)** and **Plunge Feed (mm/rev)** edit boxes, respectively. After the cut is created, the tool retracts to the initial position, based on the options selected in the **Link type** drop-down list. If the **Rapid** option is selected, the tool retracts rapidly. If the **Feed** option is selected, the tool retracts with the speed specified in the **Positional Feed** edit box. The number of cuts required to remove the material should be entered in the **Number of passes** spinner. Based on the number of passes you enter, the system calculates the amount of material to be removed in each pass. Specify the depth of the cut in each pass in the **Cut Increment** edit box. Also, the depth of the cut in the last cut is entered in the **Final Increment** edit box. The spindle speed is specified in the **Speed** edit box. Specify the position

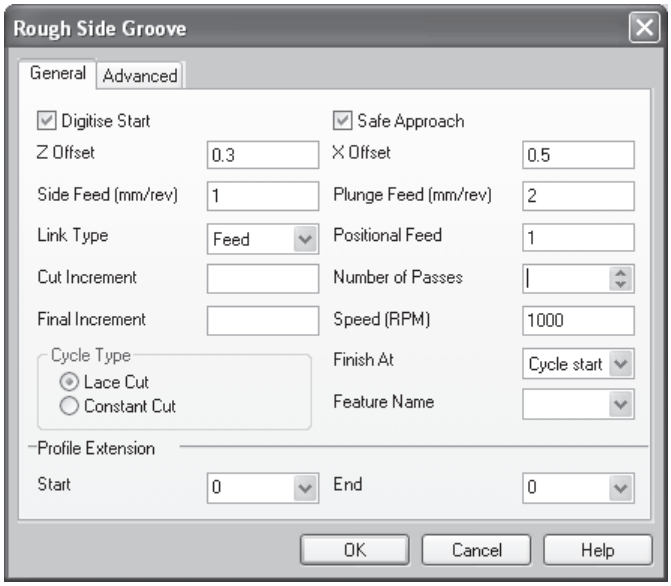

Figure 7-26 *The* ***Rough Side Groove*** *dialog box*

of the tool, after the cut, by selecting the **Cycle Start** or the **Cycle End** option from the **Finish At** drop-down list. The tool movement is decided by the option selected in the **Cycle Type** area. The options are **Lace Cut** and **Constant Cut**.

Advanced Tab

Select the **Rough Cuts Only** check box to create a rough groove. If you a require a margin of material to be left uncut along the walls, this amount is entered in the **Wall Step In** edit box. In some cases, the amount of material accumulated exceeds the tool width. The excess material will be removed, if you select the **Deep Grooving** check box. As mentioned earlier, in side grooving, first the tool cuts in the radial direction then moves in the axial direction. If you want the tool to have a retract when the direction of the cut changes from the radial direction to the axial direction, the value should be entered in the **Side Force Correction** edit box.

After entering the parameters, choose **OK**. You will be prompted to select the profile. Select the profile from the drawing area and right-click. You will be prompted to select the start and endpoint of the cut. Click near the star and place it at the required position by dragging the mouse. Next, right-click and select the start position of the cycle; the toolpath will be generated, as shown in Figure 7-27.

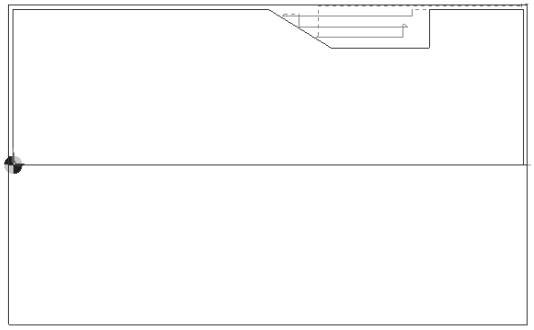

Figure 7-27 *Rough side groove toolpath generated*

Evaluation Chapter. Do not copy. Visit www.cadcim.com for details

Creating the Finish Side Groove Toolpath

Menu:	Turn Cycles > Finish Side Groove
Toolbar:	Groove Cycles > Finish Side Groove

The finish side groove is used to remove the material left by the rough side groove cycle. To generate the finish side groove toolpath, select an appropriate groove tool and choose the **Finish Side Groove** button from the **Groove Cycles** toolbar; the **Finish Side Groove** dialog box will be displayed, as shown in Figure 7-28. The parameters in the **General** tab are the same as discussed earlier in the **Rough Side Groove** cycle. Enter the parameters and select the **Advanced** tab. The options in the **Advanced** tab are discussed next.

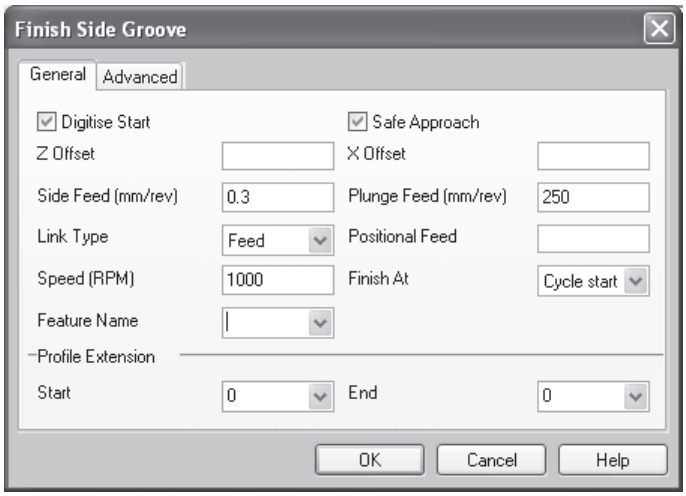

Figure 7-28 *The* ***Finish Side Groove*** *dialog box*

Advanced Tab

The distance that the tool has to retract after the radial cut and before cutting in the axial direction, is specified in the **Side Force Correction** edit box. Enter the value for the amount of material left uncut by the **Rough Side Groove** cycle in the **Material Allowance** edit box. Alternatively, select the **Digitise Rough Side Groove** check box to select the rough side groove from the drawing area. If you require a round corner after the cut, select the **Round** option from the **Corner Type** drop-down list. If you select the **Sharp** option from the drop-down list, a sharp corner will be created after the cut. The **Select By Region** check box is selected to specify the start point and the endpoint of the cut region.

After defining all the parameters, choose **OK**; you will be prompted to select the profile. Select the profile from the drawing area and right-click; you will be prompted to select the start and endpoint of the cut. Click near the star and place it at the required position by dragging the mouse. Next, right-click and select the start position of the cycle; the toolpath will be generated, as shown in Figure 7-29. If you have selected the **Digitise Rough Side Groove** check box, you will be prompted to select the rough side groove from the drawing area after selecting the start position of the cycle. Select from the drawing area; the toolpath will be generated.

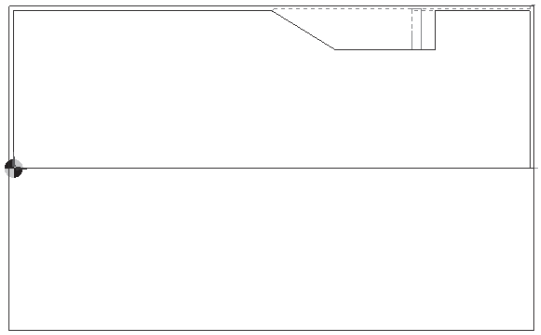

Figure 7-29 The finish side groove toolpath

TUTORIALS

Tutorial 1

Generate the toolpath for the model shown in Figure 7-30. The dimensions are shown in Figure 7-31. **(Expected Time: 45 min)**

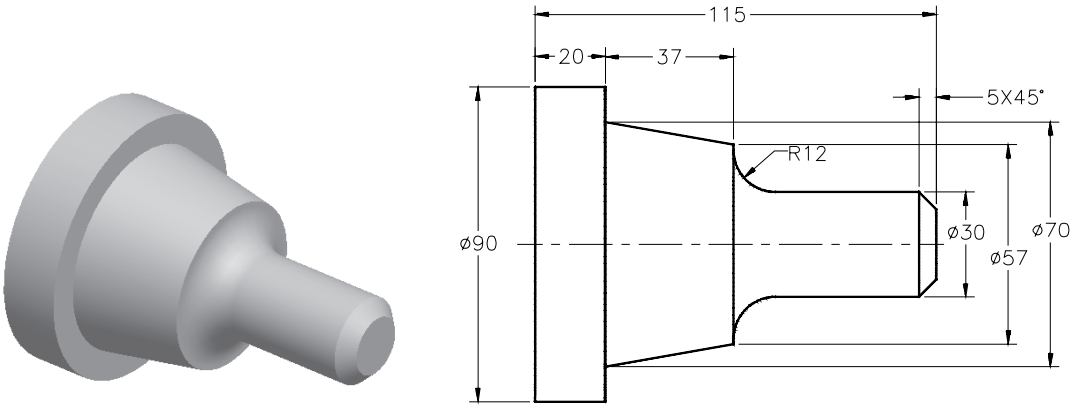

Figure 7-30 Model for Tutorial 1

The following steps are required to create the turn toolpath:

a. Draw the profile in the drawing area, as shown in Figure 7-32.
b. Create the stock by choosing the **Stock/Fixtures** button. Refer to Figure 7-33.
c. Select the turn tool and generate the straight turn toolpath. Refer to Figures 7-34 and 7-35.
d. Select the turn tool and generate the rough turn toolpath. Refer to Figures 7-36 through 7-38.
e. Select the turn tool and generate the finish turn toolpath. Refer to Figure 7-39.
f. Run the EdgeCAM simulator.
g. Save the model.

Evaluation Chapter. Do not copy. Visit www.cadcim.com for details

Creating the Profile

You first need to start a new document in EdgeCAM and then invoke the **ZX environment** and create the profile using the **Line**, **Fillet**, and **Chamfer** tools.

1. Start a new EdgeCAM document.

2. Invoke the **ZX environment** by choosing the **XY** button at the bottom right corner of the EdgeCAM screen.

3. Draw one half of the turn profile above the horizontal axis, using the **Line**, **Fillet**, and **Chamfer** tools. The profile drawn is shown in Figure 7-32.

Creating the Stock

1. Choose the **Stock/Fixtures** button from the **Design** toolbar.

2. In the **Stock/Fixtures** dialog box, select the **Automatic Stock** check box and the **Cylinder** option from the **Shape** drop-down list.

3. Enter **5** in the **Start Extension**, **End Extension**, and **Radius Extension** edit boxes and choose the **OK** button. The stock is created, as shown as in Figure 7-33.

Figure 7-32 *Profile of the model*

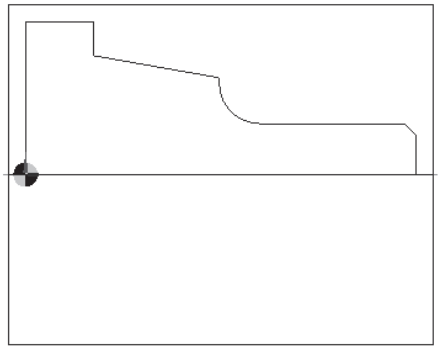

Figure 7-33 *Profile and the stock created*

Creating the Straight Turn Toolpath

Next, you need to invoke the manufacturing mode to create the straight turn toolpath.

1. Choose the **Switch to Manufacture Mode** button on the top right corner of the screen.

2. In the **New Sequence** dialog box, select the **Turn** option from the **Discipline** and the **Initial CPL** drop-down lists. Select the **fanuc2x-in.tcp** option from the **Machine Tool** drop-down list. Choose the **Lathe Setup** tab and make sure the **Mirror View** check box is cleared and choose the **OK** button to exit the dialog box.

3. Create a new layer with the name **Facing**.

4. Choose the **Turn** button from the **Main** toolbar; the **Turning Tool** dialog box is displayed. Choose the **Find** button and select the **CSKPR-2020 K12-General Turn GC 4015** tool and choose the **Select** button.

5. Set **1** in the **Position** spinner. Enter **88** in the **Side Angle** edit box.

6. Choose the **More** tab and select the **Facing** option from the **Layer** drop-down list. Choose the **OK** button.

7. Choose the **Straight Turn** button from the **Turn** toolbar; the **Straight Turn** dialog box is displayed. Set the following parameters:

   Feeddrate (mm/rev): **0.5**
   Cut Increment: 1
   Digitise Start: Select the check box
   Safe Approach: Select the check box
   Speed (RPM): **2500**
   Link Type: **Rapid**

8. Select **Face** from the **Cut Direction** drop-down list. If this list is not available, you will select the cut direction from the model. Choose **OK**; you are prompted to select the start point of the cut. Select the right top corner of the stock, as shown in Figure 7-34.

9. You are prompted to select the destination point of the cut. Select the point at the end of the profile, as shown in Figure 7-34. If the point is not highlighted, press the TAB key until it is highlighted. After selecting the point, right-click; the toolpath is generated and displayed, as shown in Figure 7-35.

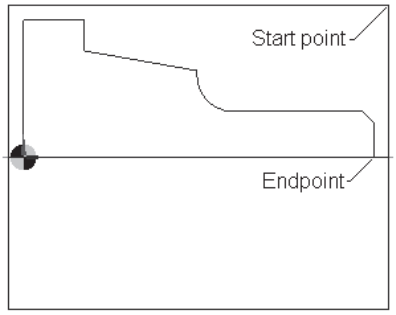

Figure 7-34 *Start point and endpoint of the cut to be selected*

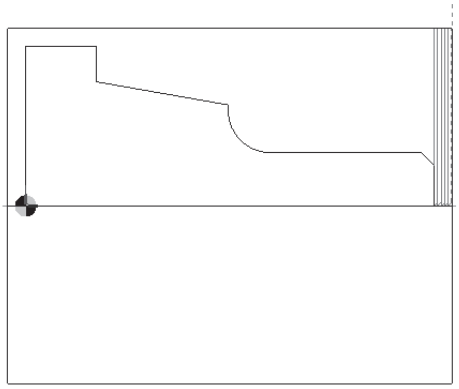

Figure 7-35 *The Straight Turn toolpath generated*

Creating the Rough Turn Toolpath

In this section, you will select the appropriate tool for the rough turn and generate the rough turn toolpath.

1. Create a new layer with the name **Rough Turn**.

Evaluation Chapter. Do not copy. Visit www.cadcim.com for details

2. Hide the **Facing** layer by double-clicking **Yes** next to **Facing** in the **Layers** window.

3. Choose the **Turn** button from the **Main** toolbar. In the **Turning Tool** dialog box, choose the **Find** button. Select the **PCLNL-2525-M12-0.8 General Turn GC1015** option and choose the **Select** button.

4. Choose the **More** tab, select the **Rough Turn** option from the **Layers** drop-down list and choose the **OK** button.

5. Choose the **Rough Turn** button from the **Turn** toolbar; the **Rough Turning** dialog box is displayed.

6. In the **General** tab, set the parameters as follows:

   Feedrate (mm/sec): **0.5**
   Cut Increment: **1**
   X Offset: **0.1**
   Rough Cuts Only: Select the check box
   Safe Approach: Select the check box

   Speed (RPM): **2500**
   Z Offset: **0.3**
   Finish At: **Cycle Start**
   Cut Direction: **Turn**

7. Choose the **OK** button; you are prompted to select the profile. Select the profile by dragging a selection box, as shown in Figure 7-36. Right-click to accept the selection.

8. You are prompted to digitise the start and the end of the cycle. Right-click to accept the default start point and the endpoint, as shown in Figure 7-37.

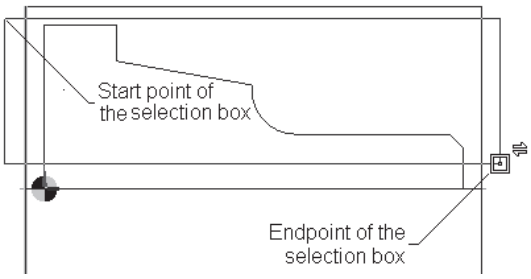

Figure 7-36 *Selection box drawn enclosing the profile*

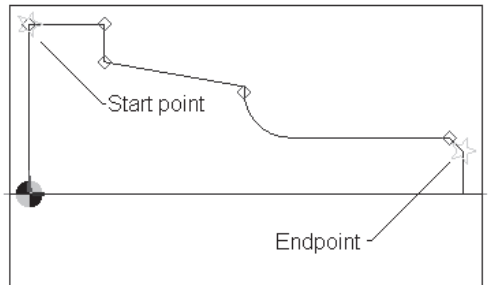

Figure 7-37 *Start point and the endpoint of the tool travel*

9. You are prompted to digitise the billet or the start point of the cycle. Select the top right-corner of the stock. The rough turning toolpath will be generated, as shown in Figure 7-38.

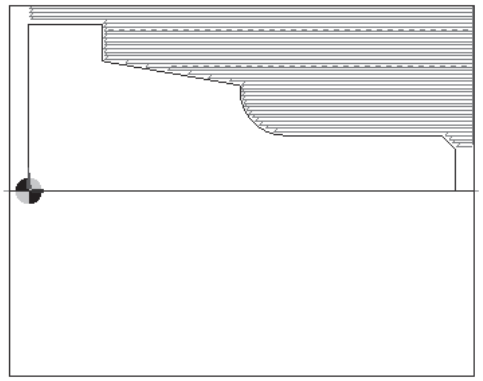

Figure 7-38 Rough turning toolpath generated

Generating the Finish Turn Toolpath

In this section, you will select the appropriate tool for the finish turn and generate the finish turn toolpath.

1. Create a new layer with the name **Finish Turn**.

2. Hide the **Rough Turn** layer by double-clicking **Yes** next to rough turn in the **Layers** window.

3. Choose the **Turn** button from the **Main** toolbar. In the **Turning Tool** dialog box, choose the **Find** button. Select the **SVLBL-2020-K16 0.4 Finish Turn GC 4015** option and choose the **Select** button.

4. Choose the **More** tab; select the **Finish Turn** option from the **Layers** drop-down list and choose the **OK** button.

5. Choose the **Finish Turn** button from the **Turn Tools** toolbar; the **Finish Turning** dialog box is displayed.

6. In the **General** tab, set the parameters as follows:

   Feedrate (mm/rev): **0.3** Speed (RPM): **2500**
   Digitise Start: Select the check box
   Safe Approach: Select the check box

7. Choose the **OK** button; you are prompted to select the profile. Select the profile by dragging a selection box similar to the one you defined in the previous section. Right-click to accept the selection.

8. You will notice an arrow indicating the start point of the cycle. Right-click to accept it.

9. You will notice a star at the endpoint of the selected profile. Right-click to accept it.

Evaluation Chapter. Do not copy. Visit www.cadcim.com for details

10. You are prompted to select the cycle start point. Right-click to accept the default value; the final toolpath will be generated. You can select the toolpath from the right to highlight it.

11. Invoke the **Layers** window and right-click. Select the **Show-all** option from the shortcut menu. The wireframe model with all the toolpaths is displayed, as shown in Figure 7-39.

Run the EdgeCAM Simulator

1. To run the EdgeCAM simulator, choose the **Simulate Machining** button from the **Main** toolbar. If the **Select Sequence** window is displayed, select the sequence and choose the **Add** button. Next choose **OK**; the **Simulator** window is displayed.

2. Choose the **Start** button to begin the simulation. You can choose the **Toggle Speed Control** tool to modify the speed of simulation. The isometric view of the model at the end of the simulation, is shown in Figure 7-40.

3. Choose the **Return to EdgeCAM** button from the **Main** toolbar to revert to the **Manufacture** mode.

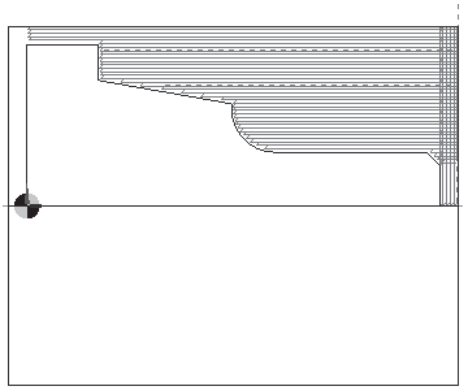

Figure 7-39 *All the toolpaths generated*

Figure 7-40 *Isometric view of the model in the EdgeCAM simulator*

Saving the File

1. Choose **File** > **Save** from the menu bar.

2. Enter the name of the file as *c07tut01* in the **File name** edit box and choose the **Save** button. The file will be saved in *\My Documents\EdgeCAM\c07* folder.

Tutorial 2

Generate the toolpath for the model shown in Figure 7-41. The dimensions of the model are shown in Figure 7-42. **(Expected Time: 45 min)**

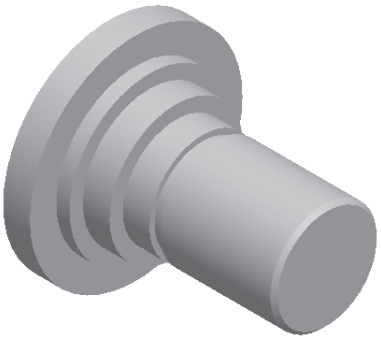

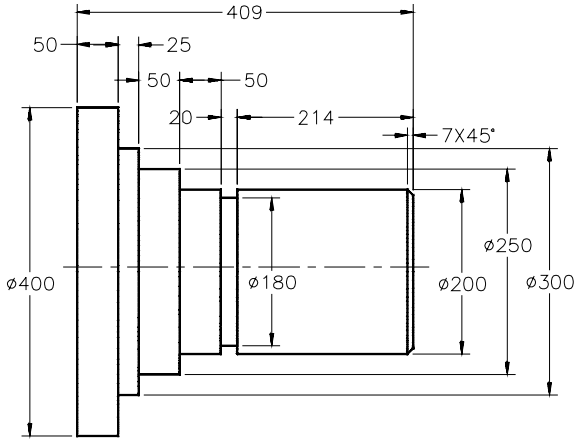

Figure 7-41 *Model for Tutorial 2*

The following steps are required to create the turn toolpath:

a. Draw the profile in the drawing area, as shown in Figure 7-43.
b. Create the stock by choosing the **Stock/Fixtures** button. Refer to Figure 7-44.
c. Select the turn tool and generate the straight turn toolpath. Refer to Figures 7-45 and 7-46.
d. Select the turn tool and generate the rough turn toolpath. Refer to Figures 7-47.
e. Select the turn tool and generate the finish turn toolpath.
h. Select the grove tool and generate the rough groove toolpath. Refer to Figures 7-51 though 7-53.
i. Select the grove tool and generate the finish groove toolpath.
j. Run the EdgeCAM simulator.
k. Save the model.

Creating the Profile

1. Start a new document and invoke the **ZX environment** by choosing the **XY** button at the bottom right corner of the screen.

2. Draw one half of the turn profile above the horizontal axes using the **Line Dialog (CTRL+L)** and **Chamfer** tools, as shown in Figure 7-43. Note that you also need to draw the horizontal line to close the groove.

Creating the Stock

1. Choose the **Stock/Fixtures** button from the **Design** toolbar.

2. In the **Stock/Fixtures** dialog box, select the **Automatic Stock** check box. Also, select the **Cylinder** option from the **Shape** drop-down list.

3. Enter **5** in the **Start Extension**, **End Extension**, and the **Radius Extension** edit boxes and choose the **OK** button. The stock is created, as shown in Figure 7-44.

Evaluation Chapter. Do not copy. Visit www.cadcim.com for details

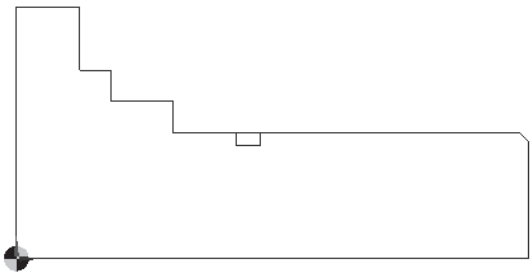

Figure 7-43 Profile of the model created

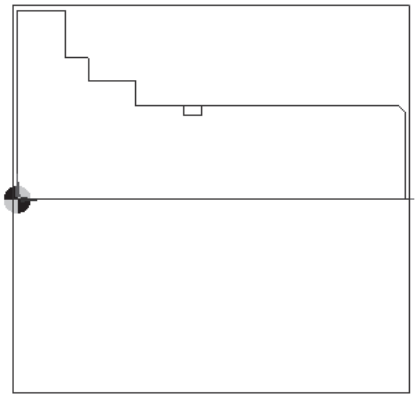

Figure 7-44 Profile after creating the stock

Generating the Straight Turn Toolpath

1. Choose the **Switch to Manufacture Mode** button on the top right corner of the screen.

2. In the **New Sequence** dialog box, select the **Turn** option from the **Discipline** and the **Initial CPL** drop-down lists. Select the **fanuc2x.tcp** option from the **Machine Tool** drop-down list and choose the **OK** button.

3. Create a new layer with the name Facing.

4. Choose the **Turn** button from the **Turn Tools** toolbar. In the **Turning Tool** dialog box, choose the **Find** button and select the **CSKPR-2020-K12 General Turn GC 4015** tool and choose the **Select** button.

5. Set **1** in the **Position** spinner. Enter **95** in the **Side Angle** edit box.

6. Choose the **More** tab and select the **Facing** option from the **Layer** drop-down list.

7. Choose the **Loading** tab, enter **-300** in the **Z Gauge** and **X Gauge** edit boxes, and choose the **OK** button.

8. Choose the **Straight Turn** button from the **Turn** toolbar; the **Straight Turn** dialog box is displayed.

9. In the **General** tab, set the parameters as follows:

   Feeddrate (mm/rev): **0.5**
   Cut Increment: 1
   Digitise Start: Select the check box
   Safe Approach: Select the check box
   Speed (RPM): **2500**
   Link Type: **Rapid**

10. Select the **Face** option from the **Cut Direction** drop down list. If this option is not available, you can select it from the screen.

11. Choose the **OK** button; you are prompted to select the start point of the cut. Select the top right corner of the stock, as shown in Figure 7-45.

12. You are prompted to select the destination point of the cut. Select the point at the end of the profile, as shown in Figure 7-45. Press the TAB key to highlight the point and right-click; the toolpath is generated and displayed, as shown in Figure 7-46.

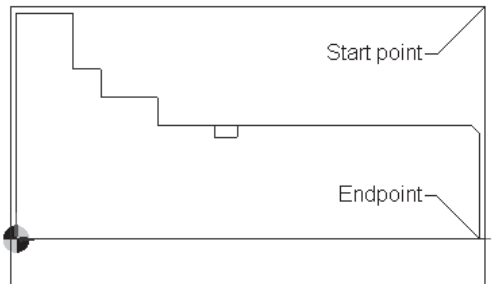

Figure 7-45 *Start and endpoint to be selected*

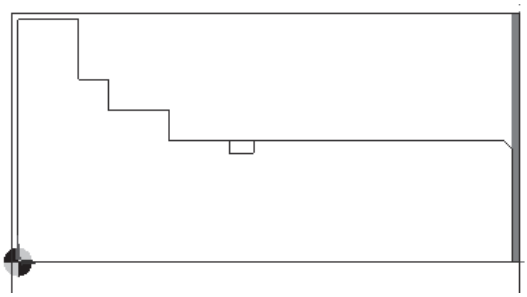

Figure 7-46 *Straight turn toolpath generated*

Creating the Rough Turn Toolpath

1. Create a new layer with the name Rough Turn. Hide the Facing layer.

2. Choose the **Turn** button from the **Turn Tools** toolbar. In the **Turning Tool** dialog box, choose the **Find** button. Select the **PCLNL-2525-M12 0.8 General Turn GC1015** option and choose the **Select** button.

3. Choose the **More** tab, select the **Rough Turn** option from the **Layers** drop-down list and choose the **OK** button.

4. Choose the **Loading** tab, enter **-300** in the **Z Gauge** and **X Gauge** edit boxes, and choose the **OK** button.

5. Choose the **Rough Turn** button from the **Turn Tools** toolbar; the **Rough Turning** dialog box is displayed.

6. In the **General** tab, set the parameters as follows:

Feedrate (mm/rev): **0.5**
Cut Increment: **1**
Finish At: **Cycle Start**
Cut Direction: **Turn**

Speed (RPM): **2500**
Z Offset: **0.3** X Offset: **0.1**
Rough Cuts Only: Select the check box
Safe Approach: Select the check box

Evaluation Chapter. Do not copy. Visit www.cadcim.com for details

7. Choose the **OK** button; you are prompted to select the profile. Select the profile by drawing a selection box, as shown in Figure 7-47. Make sure the chamfer line is selected. Right-click to accept the selection.

8. You are prompted to digitise the start and end of the cycle. Right-click to accept the start point and endpoint.

9. You are prompted to digitise the billet or the start point of the cycle. Right-click to accept the default parameter. The rough-turn toolpath will be generated, as shown in Figure 7-48.

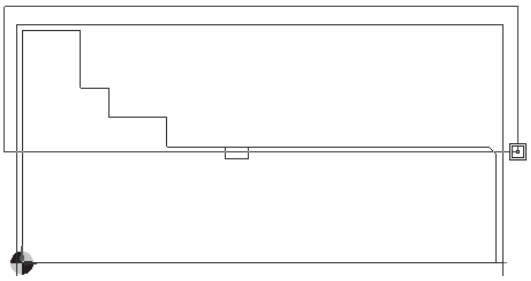

Figure 7-47 *The profile to be selected*

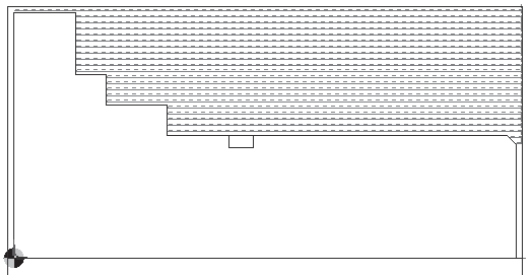

Figure 7-48 *Rough turn toolpath generated*

Creating the Finish Turn

1. Create a new layer with the name Finish Turn. Hide the Rough Turn layer.

2. Choose the **Turn** button from the **Turn Tools** toolbar. In the **Turning Tool** dialog box, choose the **Find** button. Select the **SVLBL-2020-K16 0.4-Finish Turn GC 1015** option and choose the **Select** button.

3. Choose the **More** tab, select the **Finish Turn** option from the **Layers** drop-down list, and choose the **OK** button.

4. Choose the **Loading** tab, enter **-300** in the **Z Gauge** and **X Gauge** edit boxes, and choose the **OK** button.

5. Choose the **Finish Turn** button from the **Turn Tools** toolbar; the **Finish Turning** dialog box is displayed.

6. In the **General** tab, set the parameters as follows:

   Feedrate (mm/rev): **0.3**
   Speed (RPM): **2500**
   Digitise Start: Select the check box
   Safe Approach: Select the check box

7. Choose the **OK** button; you are prompted to select the profile. Select the profile by dragging a selection box and right-click to accept the selection.

8. You will notice an arrow indicating the start point of the cycle. Right-click to accept it.

9. You will notice a star at the endpoint of the selected profile. Right-click to accept it.

10. You are prompted to select the cycle start point. Select the top right-corner of the stock. The finish turn toolpath will be generated.

Creating the Rough Groove

1. Create a new layer with the name Rough Groove. Hide the Rough Turn layer.

2. Choose the **Groove** button from the **Turn tools** toolbar. In the **Grooving Tool** dialog box, choose the **Find** button. Select the **RF 151.23-2525-60 6mm deep-GC225** option and choose the **Select** button.

3. Choose the **More** tab and select the **Rough Groove** option from the **Layers** drop-down list.

4. Choose the **Loading** tab, enter **-350** in the **Z Gauge** and the **X Gauge** edit boxes, and choose the **OK** button.

5. Choose the **Rough Groove** button from the **Groove Cycles** toolbar; the **Rough Grooving** dialog box is displayed.

6. In the **General** tab, set the parameters as follows:

Cycle Type: **Sequential**	Finish At: **Cycle Start**
Feedrate (mm/rev): **0.3**	Cut Increment: **Delete the value, if any.**
% Stepover: **50**	**Safe Approach**: Select the check box
Speed(RPM): **2500**	Z Offset: **0.3**
X Offset: **0.5**	
Profile Extension Area	
Start: **-6**	End: **0**

7. Choose **OK**; you are prompted to select the profile. Select the horizontal line, as shown in Figure 7-49, and right-click to accept the selection.

8. You are prompted to digitise the billet or the start point of the cycle. Select a position above the start point, as shown in Figure 7-49 and right-click.

9. You are prompted to digitise the cut direction. Right-click to accept the direction; the rough side groove toolpath is generated, as shown in Figure 7-50. You may have to reverse the value in the **Start** and **End** edit boxes in the **Profile Extension** area if the display of the toolpath in your case is reversed.

Creating the Finish Groove

1. Create a new layer with the name Finish Groove. Hide the Rough groove layer.

Evaluation Chapter. Do not copy. Visit www.cadcim.com for details

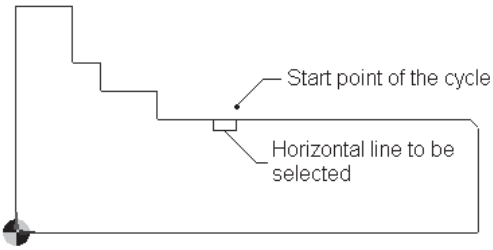

Figure 7-49 *Horizontal line to be selected*

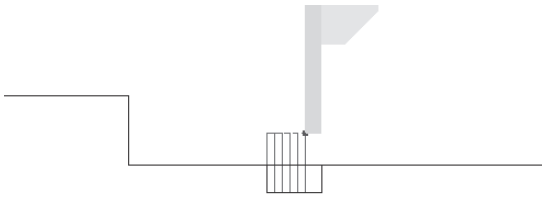

Figure 7-50 *Rough Groove toolpath generated*

2. Choose the **Groove** button from the **Turn Tools** toolbar. In the **Grooving Tool** dialog box, choose the **Find** button. Select the **RF 151.23-2525-60 6mm deep-GC225** option and choose the **Select** button.

3. Choose the **More** tab, select the **Finish Groove** option from the **Layers** drop-down list, and choose the **OK** button.

4. Choose the **Loading** tab, enter **-350** in the **Z Gauge** and the **X Gauge** edit boxes, and choose the **OK** button.

5. Choose the **Finish Groove** button from the **Groove Cycles** toolbar; the **Finish Grooving** dialog box is displayed.

6. In the **General** tab, set the parameters as follows:

   Feedrate (mm/rev): **0.5** Speed (RPM): **2500**
   Finish At: **Cycle Start** **Digitise Start**: Select the check box
   Safe Approach: Select the check box

   Profile Extension Area
   Start: **-6** End: **0**

7. Choose the **OK** button; you are prompted to select the profile. Select the horizontal line close to the endpoint, as shown in Figure 7-49, and right-click to accept the selection.

8. You are prompted to digitise a new start point for the profile. Right-click to accept the start point and the endpoint.

9. You are prompted to digitise the billet or the start point of the cycle. Select a position above the start point, as shown in Figure 7-49; the finish groove toolpath is generated. If in your case, the tool intersects with the profile, you will have to reverse the value in the **Start** and **End** edit boxes in the **Profile Extension** area. Figure 7-51 shows the profile with all the toolpaths.

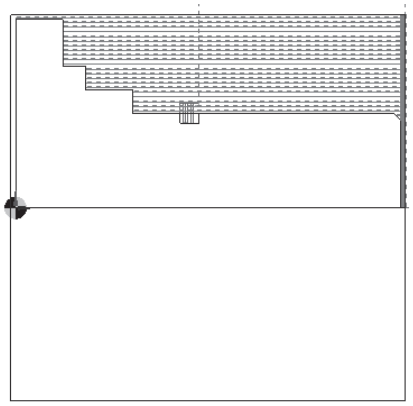

Figure 7-51 Profile with all the toolpaths

Run the EdgeCAM Simulator

1. To run the EdgeCAM simulator, choose the **Simulate Machining** button from the **Main** toolbar; the **Simulator** window is displayed.

2. Choose the **Start** button to begin the simulation. You can choose the **Toggle Speed Control** tool to modify the speed of machining. The isometric view of the component, after completing the simulation, is shown in Figure 7-52.

3. Choose the **Return to EdgeCAM** button from the **Main** toolbar to return to the **Manufacture** mode.

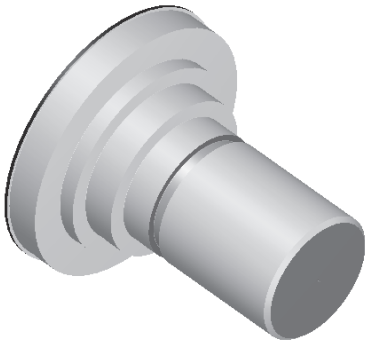

Figure 7-52 Isometric view of the model after simulation

Saving the File

1. Choose **File** > **Save** from the menu bar.

2. Enter the name of the file as *c07tut02* in the **File name** edit box and choose the **Save** button. The file will be saved in *\My Documents\EdgeCAM\c07* folder.

Evaluation Chapter. Do not copy. Visit www.cadcim.com for details

Self-Evaluation Test

Answer the following questions and then compare your answers with those given at the end of this chapter:

1. To invoke the turning environment in the **Manufacturing** mode, select _____ option from the **Discipline** drop-down list.

2. The equivalent standard view for the top view in the **ZX environment** is _____.

3. You cannot create a transparent stock in the **ZX environment**. (T/F)

4. The **D55Rhhombic** shape tool is used for _____ turning.

5. The angle that the tool will follow during an advance is _____.

6. You cannot set the direction of the cut for straight turning. (T/F)

7. Which check box is selected to remove the material in equal amount in each pass?

   (a) % Stepover (b) No Step over adjustment
   (c) Equal adjustment (d) None

8. _____ turning is used for turning irregular profiles.

9. _____ is a process of creating a neck to terminate the thread.

10. In grooving, you can give a cut increment for the first cut only. (T/F)

Review Questions

Answer the following questions:

1. The _____tool is used for the rough turn.

2. The corresponding standard view for the front view in the **ZX environment** is _____.

3. Milling tools are also available in the turning environment. (T/F)

4. After importing a solid from the other CAD packages, which one of the following buttons is required to align it to horizontal axis?

   (a) Align body for turning (b) Find features
   (c) Form turn billet (d) All of the above

5. The distance that the tool has to move before it starts moving toward the cycle start point is _____.

6. A turning operation uses a single point cutting tool. (T/F)

7. Which radio button is selected to move the tool from one end to another while removing material?

   (a) Sequential (b) Ascending
   (c) Center Sequential (d) Center alternate

8. Which option is used to translate the profile created in the **XY environment** to the **ZX environment**.

9. In the side groove, the tool first moves in the axial direction and then in the radial direction. (T/F)

10. To return the tool to the initial position at a rapid rate, _____ option is selected in the **Link** drop-down list.

Exercises

Exercise 1

Generate the toolpath for the model shown in Figure 7-53. The dimensions of the model are shown in Figure 7-54. **(Expected Time: 45 min)**

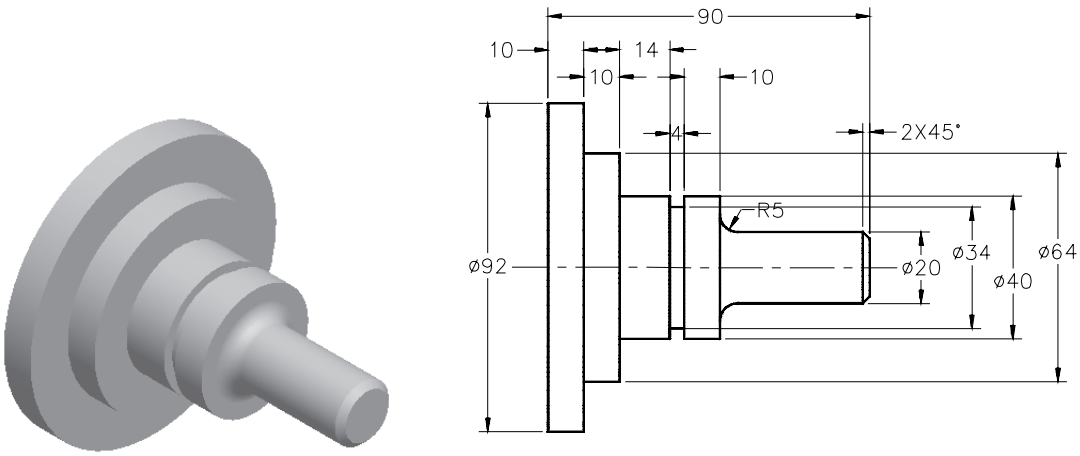

Figure 7-53 *Model for Exercise 1*

Evaluation Chapter. Do not copy. Visit www.cadcim.com for details

Exercise 2

Generate the toolpath for the model shown in Figure 7-55. The dimensions of the model are shown in Figure 7-56. **(Expected Time: 45 min)**

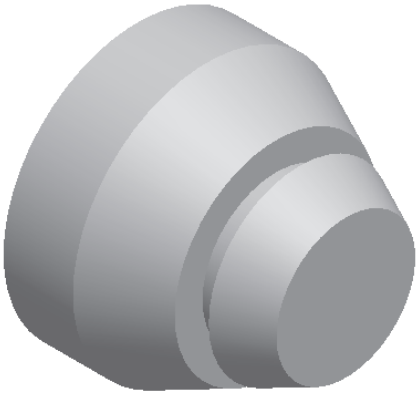

Figure 7-55 *Model for Exercise 2*

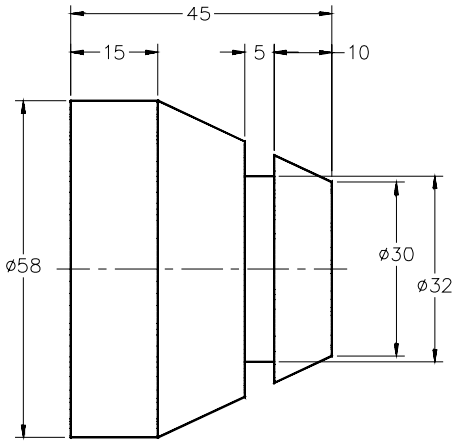

Figure 7-56 *Dimensions for Exercise 2*

Answers to Self-Evaluation Test

1.**Turn**, 2. **Turn**, 3. F, 4. Finish, 5. Approach, 6. F, 7. **No Stepover adjustment**, 8. **Rough**, 9. Groove, 10. T