Chapter 16

Introduction to Mold Design

Learning Objectives

After completing this chapter, you will be able to:

- *Analyze draft angles*
- *Add shrinkage*
- *Create workpiece*
- *Create mold volumes*
- *Create parting surfaces*
- *Create mold components*
- *Create runners*
- *Create water lines*
- *Fill the mold*
- *Open the mold*

INTRODUCTION TO MOLD DESIGN

In this chapter, you will learn about basic molding process that can be used to design molds for plastic molded components in Creo Parametric. Generally, the complete process of mold designing consists of designing of mold base, gates and runners, ejection mechanism, and core and cavity. But before you learn about mold designing, it is necessary that you learn about some of the basic terms related to mold design.

MOLD ASSEMBLY

Mold assembly is an assembly created by assembling a number of parts such as top plate, back plate, core back plate, cavity back plate, ejector mechanism, guide bushes, guide pillars, fasteners, cooling mechanism, and so on. The complete mold is designed by considering the part to be molded and the design depends on the complexity of the part. Some of the elements mentioned above are discussed next.

Cavity

Cavity is the female part of the mold and it remains hollow from inside. The molten metal or the molten plastic is poured into it so that it can take the shape of the cavity to create the component.

Core

Core is the male part of the mold. It generally helps in defining the holes, pockets, and other cut out features of a part while molding.

Shrinkage Factor

Shrinkage factor is defined as the amount by which the molded component shrinks depending on the type of material and the shape of the mold. The shrinkage factor is defined in terms of percentage.

Parting Line

Parting line is the line which splits and open its respective molds. Figure 16-1 shows an assembly of core and cavity with the parting line. Figure 16-2 shows an exploded view of the core and cavity assembly with the component that will be created using this combination of core and cavity.

Parting Surface

Parting surface is also used to split a workpiece into core and cavity. In Creo Parametric, you can create a parting surface by using three methods which are:

1. Using skirt surface
2. Using shadow surface
3. Creating custom surface created by using surfacing tools

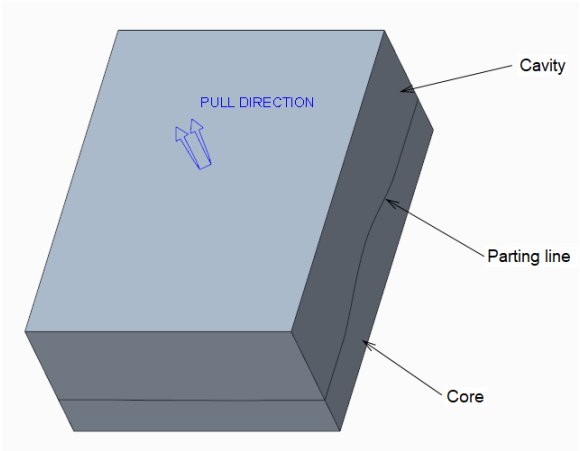

Figure 16-1 *Assembly of core and cavity with the parting line*

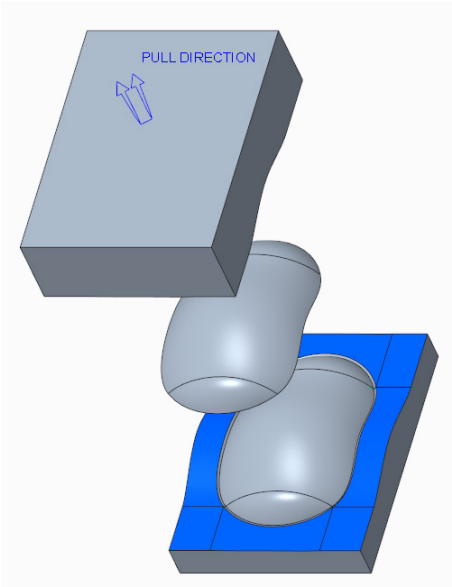

Figure 16-2 *Exploded view of the core and cavity assembly*

Draft Angle

In a molded or cast component, the draft angles are of great importance. If the faces of the core and cavity do not have any draft angle, then you cannot take out the molded or cast component from the mold. Therefore, it is very important that you should add required draft angles to the component.

Runner

It is a channel machined into core and cavity which allows the molten material to flow in between them. While designing a runner, the designer should consider the shape of cross section, size of runner, and the runner layout.

MOLD DESIGNING USING CREO PARAMETRIC

In Creo Parametric, there are various tools which can be used for mold designing. Some of these tools are used in this chapter to create mold design in the following tutorials. In these tutorials, you will learn to create molds having single cavity.

TUTORIALS

To perform the tutorials, you need to download the zipped file *c16_creo_5.0_input* from the **Input Files** section of the CADCIM website. The complete path for downloading the file is:

Textbooks > CAD/CAM > Creo Parametric > Creo Parametric 5.0 for Designers 5th Edition > Input Files > C16_creo_5.0_input

After the file is downloaded, extract the folder to the location C:\Creo Parametric\ and rename it as c16.

Tutorial 1

In this tutorial, you will extract the core and cavity of a plastic cover shown in Figure 16-3. The resultant core is displayed in Figure 16-4 and the cavity is displayed in Figure 16-5. Figure 16-6 shows an exploded view of the assembly of the Mold Base. **(Expected time: 60 min)**

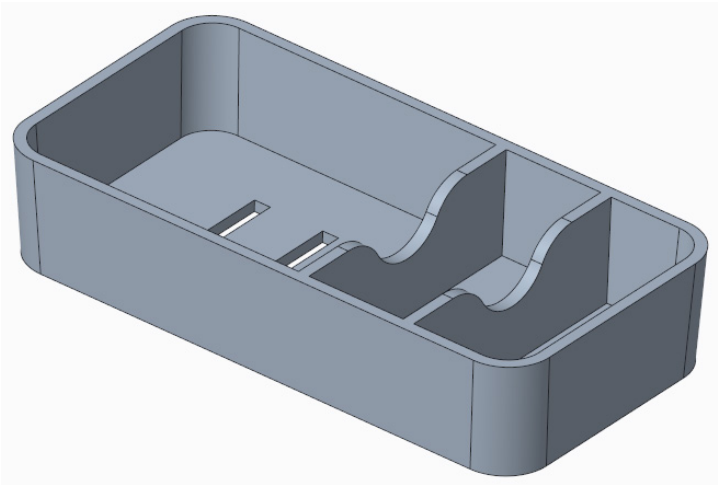

Figure 16-3 *Rotated view of plastic cover*

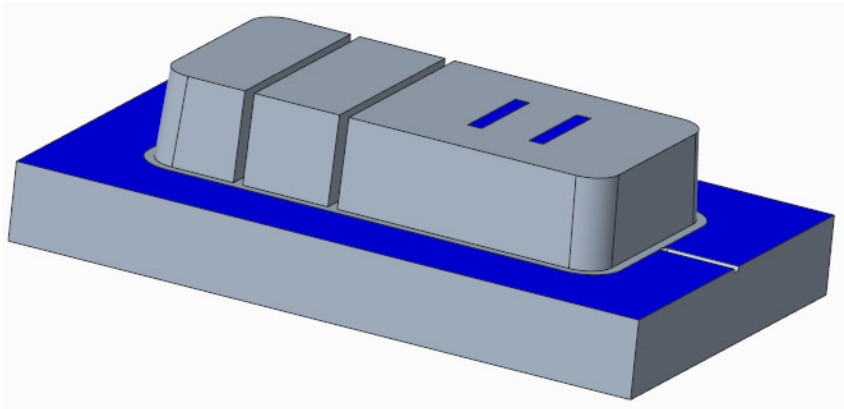

Figure 16-4 *Rotated view of core of the Plastic Cover*

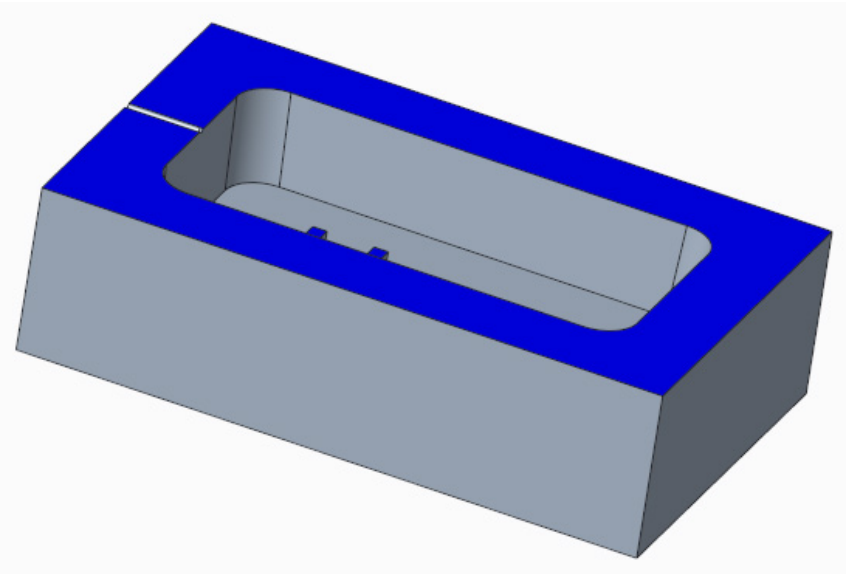

Figure 16-5 *Rotated view of cavity of the Plastic Cover*

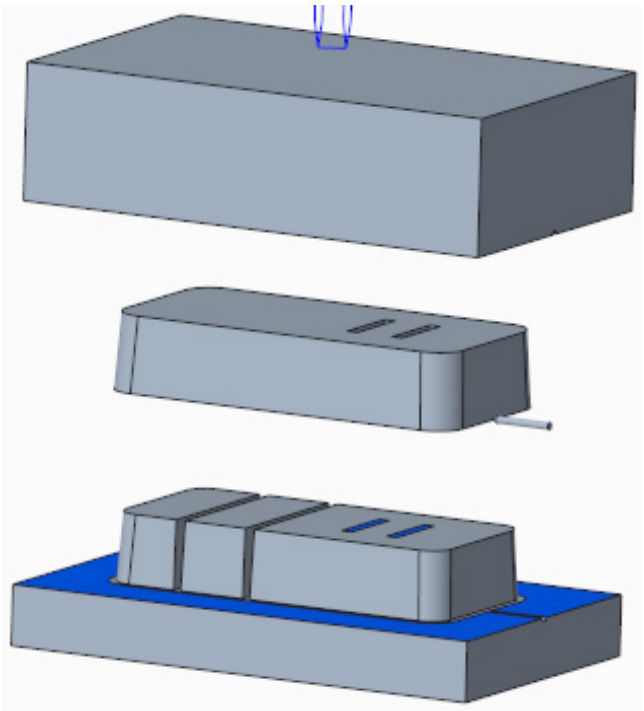

Figure 16-6 *Exploded view of the Mold Base assembly*

The following steps are required to complete this tutorial:

a. Open the model.
b. Analyze the model for draft by using the **Draft** tool.

c. Activate the **Manufacturing** mode.
d. Add shrinkage.
e. Create workpiece.
f. Create parting surface.
g. Split volumes.
h. Create runners.
i. Explode assembly.

When you start a Creo Parametric session, the first task is to set the working directory. Make sure the required working directory is selected.

Starting Creo Parametric and Opening a Model

1. Start Creo Parametric by double-clicking on the Creo Parametric icon on the desktop of your computer.

2. Choose the **Open** button in the **Home** tab; the **File Open** dialog box is displayed. Browse to the location where you have stored the downloaded file. Select *tut_1.prt* and choose the **Open** button in the dialog box to open the model.

Analyzing the Model for Draft Angles

As discussed earlier, before extracting the core and cavity, you need to make sure that the required draft angles are applied to the model so that the component can easily be removed from the core after solidification. Therefore, you will analyze the model using the **Draft** tool.

1. Choose the **Mold/Cast** tool from the **Engineering** group of the **Applications** tab; the **Creo Parametric 5.0** window is displayed with the **Mold & Cast** tab chosen. Figure 16-7 shows the tools available in the **Mold & Cast** tab.

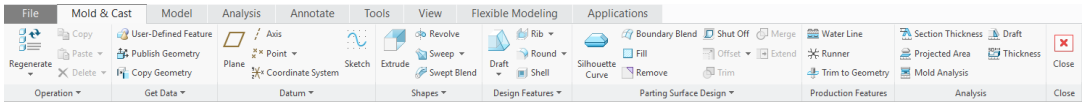

Figure 16-7 *Tools in the* ***Mold & Cast*** *tab*

2. Choose the **Draft** tool from the **Analysis** group of the **Mold & Cast** tab; the **Draft Analysis** dialog box is displayed, as shown in Figure 16-8.

3. Activate the **Surface** collector and select the model in the **Surface** collector by selecting **TUT_1.PRT** from the **Model Tree**.

4. Clear the **Use the pull direction** check box and then click in the **Direction** collector. Next, select the **FRONT** datum plane in the **Model Tree**; the **Color Scale** dialog box is displayed.

5. Change the value of the draft to **3** in the **Draft** edit box in the **Draft Analysis** dialog box if not set by default. Next, expand the **Color Scale** dialog box by choosing the down arrow at the bottom right corner and then change the value in the **Number** edit box of the **Settings** area to **3**, as shown in Figure 16-9.

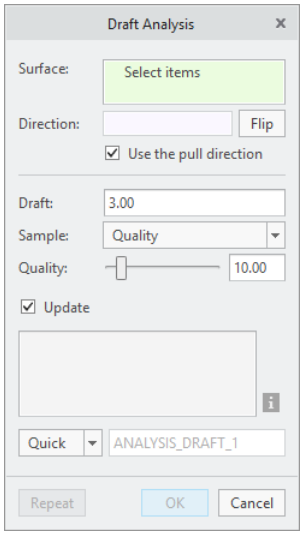

Figure 16-8 *The* ***Draft Analysis*** *dialog box*

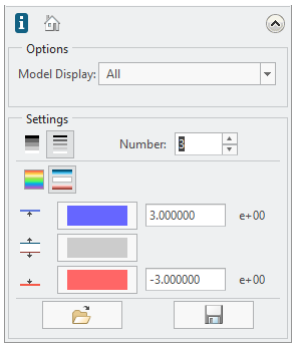

Figure 16-9 *Partial view of the expanded* ***Color Scale*** *dialog box*

You will notice that the faces having a positive draft and a negative draft are displayed in blue and peach color, respectively. Also, some faces with neutral draft angle are displayed in grey color. Figure 16-10 shows the model after draft analysis.

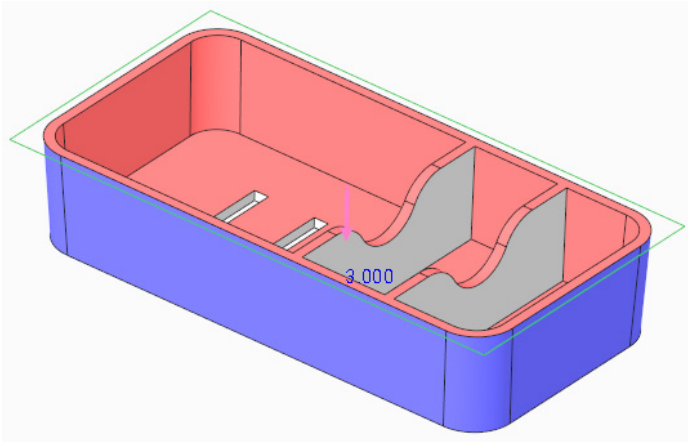

Figure 16-10 *Model after draft analysis*

6. Choose the **OK** button from the **Draft Analysis** dialog box and save your file. Choose the **Close** button from the **Quick Access** toolbar to close the current file.

Starting the Manufacturing Mode

1. Choose the **New** button from the **Data** group; the **New** dialog box is displayed. Select the **Manufacturing** radio button from the **Type** area of the **New** dialog box and select the **Mold cavity** radio button from the **Sub-type** area; the default name of the sketch appears in the **File name** edit box.

2. Enter *c16tut1* in the **File name** edit box and clear the **Use default template** check box. Next, choose the **OK** button; the **New File Options** dialog box is displayed.

3. Choose the **mmns_mfg_mold** option and choose the **OK** button; the Mold environment of the **Manufacturing** mode is activated.

Importing the Model

1. Choose the **Locate Reference Model** tool from the **Reference Model** drop-down in the **Reference Model & Workpiece** group of the **Mold** tab; the **Open** dialog box is displayed. Select *tut_1.prt* and choose the **Open** button in the dialog box to open the model; the **Create Reference Model** dialog box is displayed, as shown in Figure 16-11.

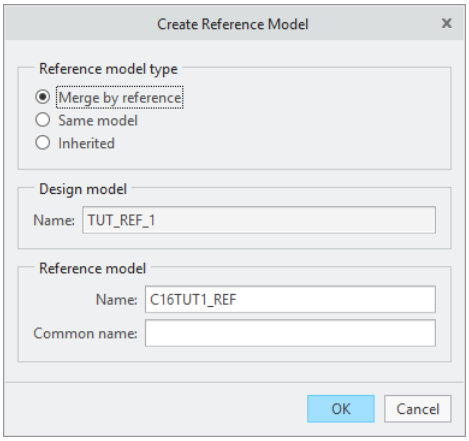

Figure 16-11 *The* ***Create Reference Model*** *dialog box*

2. Select the **Same model** radio button from the **Reference model type** area in the **Create Reference Model** dialog box and choose the **OK** button; the **Layout** dialog box is displayed. Choose the **OK** button and choose the **Done/Return** option from the **Menu Manager**. The inserted part is displayed in the drawing area with the **PULL DIRECTION** arrow along the z-axis, as shown in Figure 16-12.

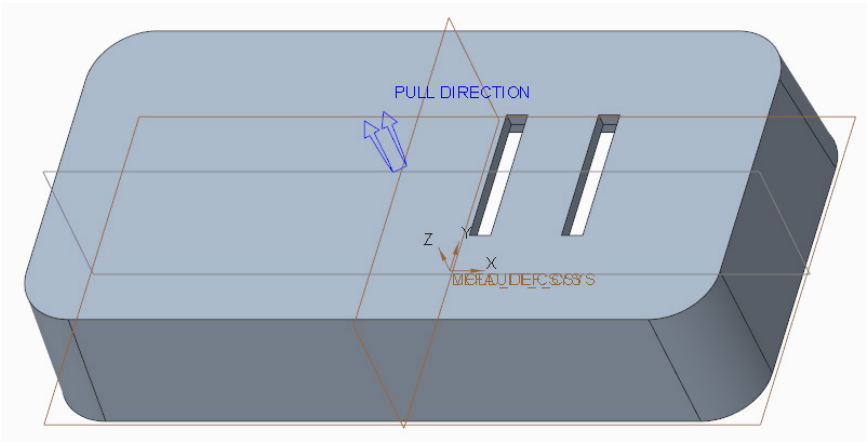

Figure 16-12 *Model after insertion in the Mold environment*

Adding Shrinkage

Before proceeding, you need to add shrinkage factor to the model. As discussed earlier, the scaling of the model is done in order to create a core and cavity larger than the component to be manufactured as the component shrinks after solidification. The shrinkage factor always depends on the material to be used for molding or casting and also on the type of mold.

1. Choose the **Shrink by scale** tool from the **Shrinkage** drop-down in the **Modifiers** group; the **Shrinkage By Scale** dialog box is displayed, as shown in Figure 16-13.

2. Select the **DEFAULT_CSYS** coordinate system from the drawing area. Next, enter **0.01** in the **Shrink Ratio** edit box of the **Shrinkage By Scale** dialog box and choose the button.

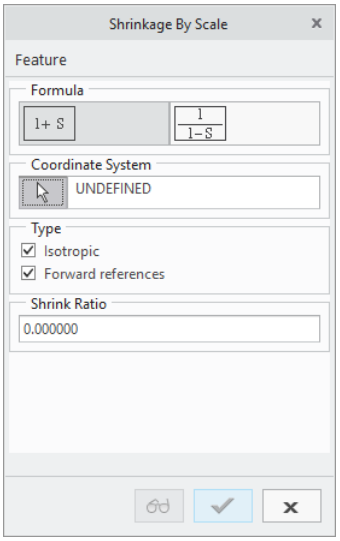

Figure 16-13 *The* ***Shrinkage By Scale*** *dialog box*

Creating the Workpiece

Now, you need to create a workpiece. Workpiece is needed to create core and cavity to complete the mold process.

1. Choose the **Automatic Workpiece** tool from the **Workpiece** drop-down in the **Reference Model & Workpiece** group; the **Automatic Workpiece** dialog box is displayed.

2. Next, select the **MOLD_DEF_CSYS** coordinate system from the **Model Tree**. Then enter **80** in the **Uniform Offsets** edit box in the **Offsets** area of the **Automatic Workpiece** dialog box and press ENTER. Next, choose the **OK** button.

Figure 16-14 shows the model inside the workpiece. Clear visibility of all datums from the **Datum Display Filters** drop-down list in the **Graphics** toolbar.

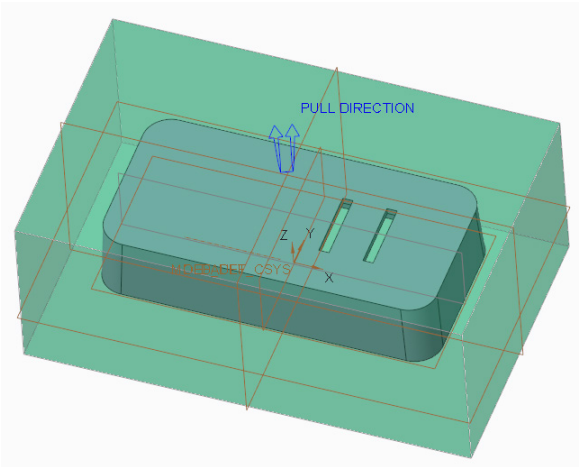

Figure 16-14 *Model inside the workpiece*

Creating a Parting Surface

In this tutorial, you are going to use skirt surface as a parting surface. Now, to create a skirt surface, first you need to create a silhouette curve.

1. Choose the **Silhouette Curve** tool from the **Design Features** group; the **Silhouette Curve** dashboard is displayed. Next, choose the **Loop Selection** tab; the **Loop Selection** slide-down panel is displayed.

2. Choose the **Chains** tab in the **Loop Selection** slide-down panel and select the **Lower** option from the **2-1** and **3-1** drop-down lists. Next, choose the **OK** button to create the silhouette curve.

3. Choose the **Parting Surface** tool from the **Parting Surface** drop-down in the **Parting Surface & Mold Volume** group; the **Parting Surface** dashboard is displayed.

4. Choose the **Skirt Surface** tool from the expanded **Surfacing** group of the **Parting Surface** dashboard; the **Skirt Surface** dialog box along with the **Menu Manager** is displayed, as shown in Figures 16-15 and 16-16, respectively.

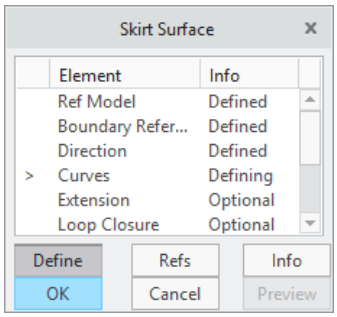

*Figure 16-15 The **Skirt Surface** dialog box*

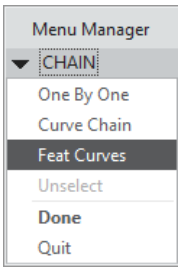

*Figure 16-16 The **Menu Manager***

5. Select the silhouette curve created by the **Silhouette Curve** tool from the drawing area and choose the **Done** option from the **Menu Manager**.

6. Choose the **OK** button from the **Skirt Surface** dialog box and choose the **OK** button from the **Controls** group of the **Parting Surface** dashboard; parting surface is created, as shown in Figure 16-17.

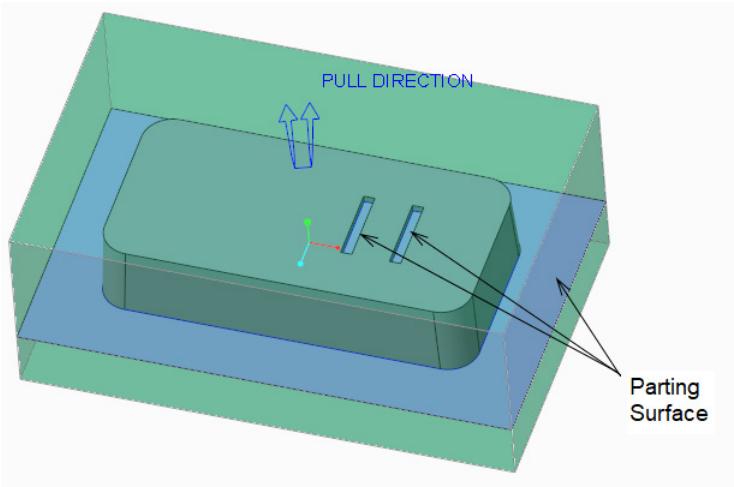

Figure 16-17 *Mold with parting surface*

Splitting the Workpiece

To create core and cavity, you need to split the workpiece by using the parting surface. But before splitting the workpiece, you need to cutout the model from the workpiece.

1. Choose the **Refpart Cutout** tool from the **Parting Surface & Mold Volume** group of the **Mold** tab to cut the reference model from the workpiece; the **Refpart Cutout** dashboard is displayed. Next, choose the **OK** button to complete the cutout.

2. Choose the **Volume Split** tool from the **Mold Volume** drop-down of the **Parting Surface & Mold Volume** group; the **Volume Split** dashboard is displayed.

3. Click in the **Mold volume to split** collector and select **Refpart Cutout 1** from the **Model Tree** if not already selected. Next, click in the **Parting surface for splitting the mold volume** collector and select the **Skirt Surface id nnn** from the drawing area by pressing the CTRL key; you will notice that your model is highlighted in orange color.

4. Choose the **OK** button to complete the process.

Creating Core and Cavity

1. Choose the **Cavity insert** tool from the **Mold Component** drop-down of the **Components** group to create core and cavity for the reference model; the **Create Mold Component** dialog box is displayed.

2. Choose the **Advanced** option from the **Create Mold Component** dialog box; the **Create Mold Component** dialog box gets expanded. Next, select **Volume_1** from the upper area of the **Create Mold Component** dialog box. Next, select **Volume_1** from the **Advanced** area, as shown in Figure 16-18, and change the name **Volume_1** to **Core_1** in the **Name** edit box of the **Mold Component** area.

3. Similarly, change the name of **Volume_2** to **Cavity_1**.

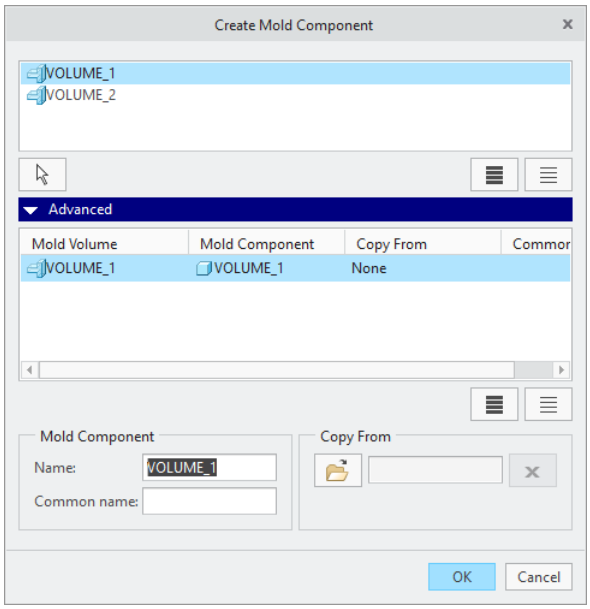

*Figure 16-18 The **Create Mold Component** dialog box*

4. Press the CTRL key and select **Volume_1** and **Volume_2** from the upper area of the **Create Mold Component** dialog box and choose the **OK** button; **Core_1** and **Cavity_1** are created and added to the **Model Tree**.

Creating Runner

As discussed earlier, runners are crucial part of mold design because they are required to provide passage for molten material to flow in the mold. But before creating runner in the mold, you need to hide all the parts except **Cavity_1** from the **Model Tree**.

1. Choose the **Runner** tool from the **Production Features** group to create runner in the mold; the **Runner** dialog box along with the **Menu Manager** is displayed, as shown in Figures 16-19 and 16-20, respectively.

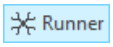

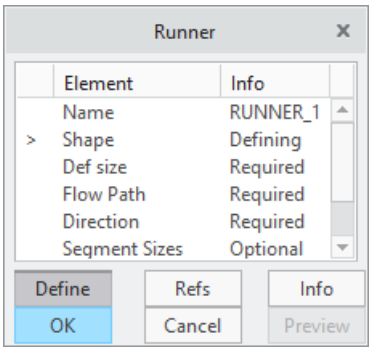

*Figure 16-19 The **Runner** dialog box*

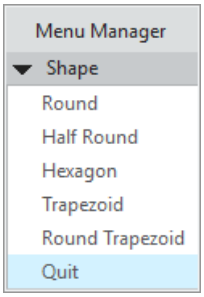

*Figure 16-20 The **Menu Manager***

2. Select the **Round** option from the **Shape** rollout in the **Menu Manager**; the **Enter runner diameter** edit box is displayed. Enter **10** in this edit box and press ENTER.

3. Select the bottom face of **Cavity_1** as the sketching plane for creating runner, as shown in Figure 16-21. Next, choose the **Okay** option in the **DIRECTION** rollout of the **Menu Manager** and select the **Default** option from the **SKET VIEW** rollout of the **Menu Manager**; the sketcher environment gets activated.

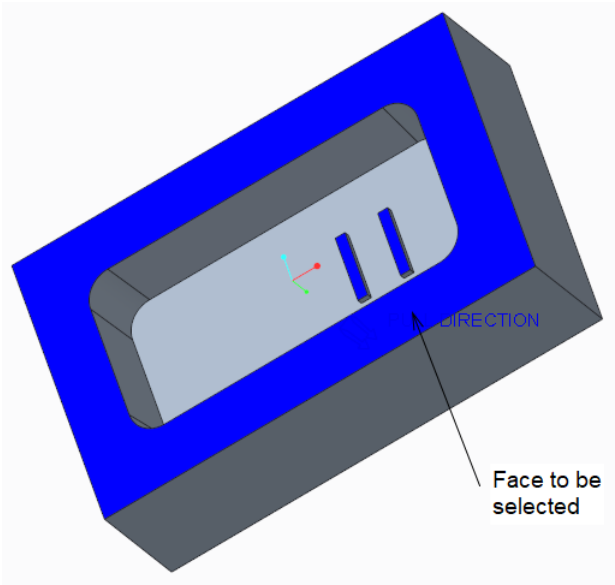

Figure 16-21 *Face to be selected as a sketching plane*

Now, you need to create a path for the runner by drawing a line in place of the runner. But first you need to select two edges to make them reference axes for the sketch. Select any two edges to make reference axes.

4. Draw and dimension a line sketch, as shown in Figure 16-22 and choose the **OK** button from the **Sketch** dashboard; the **Intersected Components** dialog box is displayed.

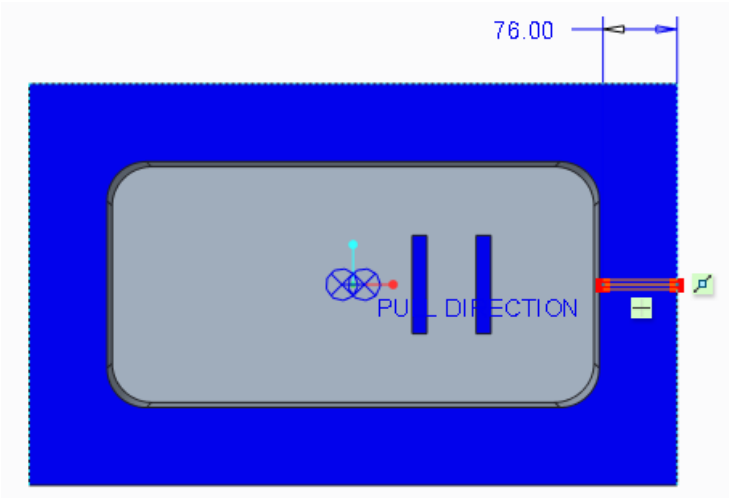

Figure 16-22 *Sketch for profile of the runner*

5. Select the **Automatic update** check box in the **Intersected Components** dialog box. Next, choose the button to select all the components that are going to intersect the runner after the procedure is completed and choose the **OK** button; the **Runner** dialog box is displayed. Choose the **OK** button to complete the procedure.

   You will notice that a cutout appears in the **Cavity_1**. Now, unhide **Core_1** from the **Model Tree**.

Creating Mold Component

Now, you need to fill the core and cavity parts to create a mold component.

1. Choose the **Create Molding** tool from the **Components** group to create mold component; the **Enter Part name** edit box is displayed at the top of the drawing area.

2. Enter **Molding** as a part name in the **Enter Part name** edit box and press ENTER; another edit box is displayed. Accept the default value and press ENTER. The mold component is created.

Exploding the Mold Assembly

Now, you need to explode the mold assembly that you have created.

1. Choose the **Mold Opening** tool from the **Analysis** group to explode the mold assembly; the **Menu Manager** is displayed.

2. Select the **Define Step** option from the **MOLD OPEN** rollout of the **Menu Manager**; the **Menu Manager** gets modified. Next, choose the **Define Move** option from the **DEFINE STEP** rollout and select **Cavity_1** from the drawing area and then press the middle mouse button.

3. Select an edge, as shown in Figure 16-23; you are prompted to enter the movement displacement. Enter **250** and press ENTER. Next, choose the **Done** option from the **Menu Manager**; the **Cavity_1** moves upward, refer to Figure 16-24.

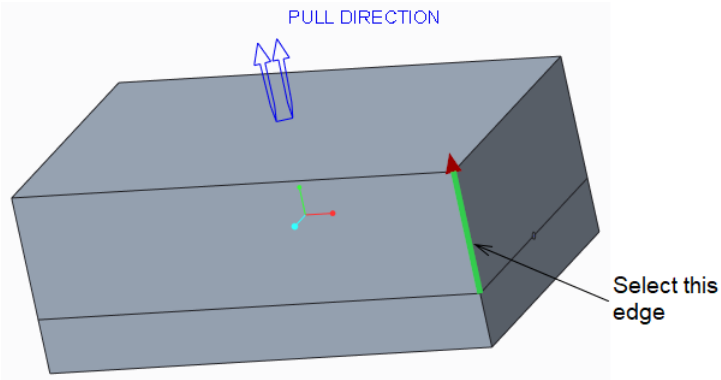

Figure 16-23 *Edge to be selected*

Similarly, you need to move **Core_1** from the assembly too.

4. Repeat step 2 and select **Core_1** from the drawing area instead of **Cavity_1**.

5. Select an edge, as shown in Figure 16-24; you are prompted to enter the value of movement displacement. Enter **-250** and press ENTER. Next, choose the **Done** option from the **Menu Manager**; the mold assembly gets exploded, as shown in Figure 16-25.

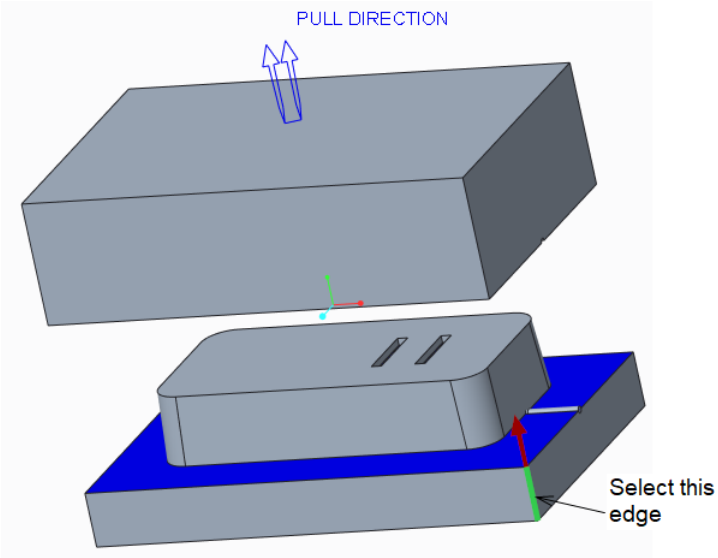

Figure 16-24 *Edge to be selected*

6. Choose the **Done/Return** option from the **Menu Manager** to exit the **Mold Opening** tool.

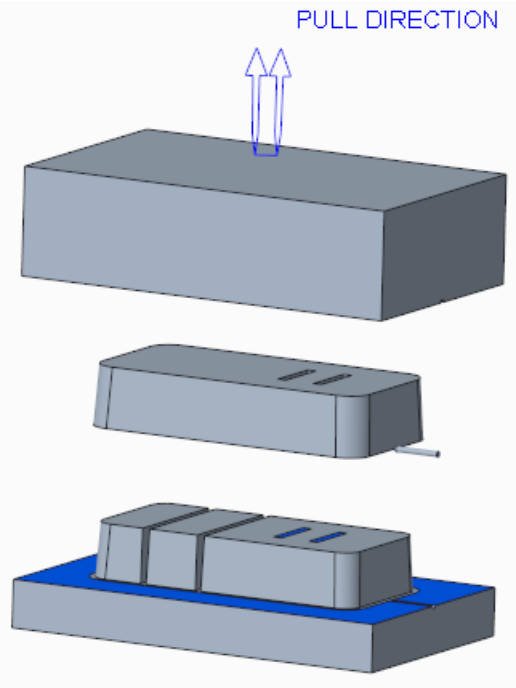

Figure 16-25 *Exploded view of mold assembly*

Saving and Closing the Model

Now, you need to save the model.

1. Choose the **Save** button from the **File** menu and save the model. Then, choose the **Close** button to exit.

Tutorial 2

In this tutorial, you will extract the core and cavity of a plastic component shown in Figure 16-26. The resultant core is displayed in Figure 16-27 and the cavity is displayed in Figure 16-28. Figure 16-29 shows an exploded view of the assembly of the Mold Base. **(Expected time: 60 min)**

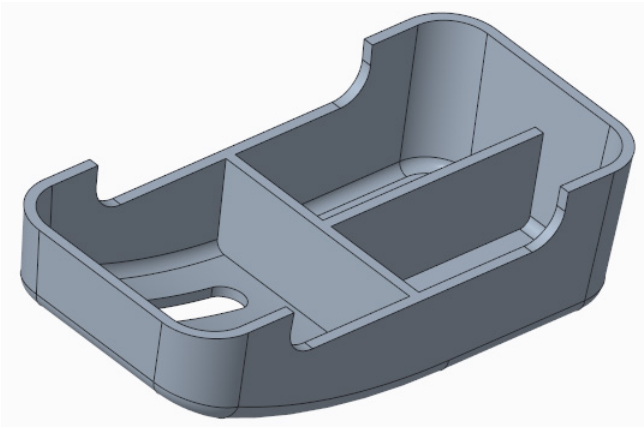

Figure 16-26 *Rotated view of the plastic component*

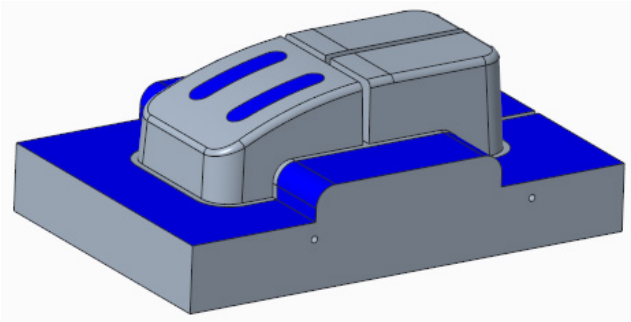

Figure 16-27 *Rotated view of core of the Plastic Component*

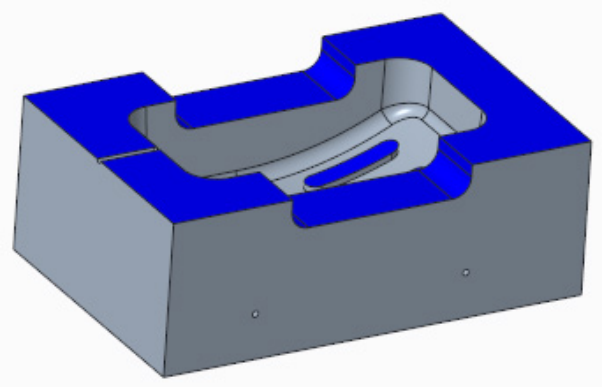

Figure 16-28 *Rotated view of cavity of the Plastic Component*

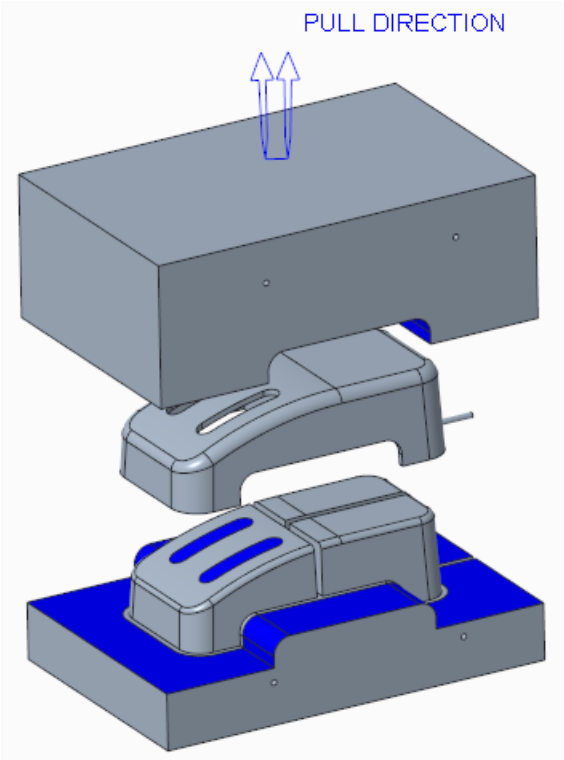

Figure 16-29 *Exploded view of Mold Base assembly*

The following steps are required to complete this tutorial:

a. Open the model.
b. Analyze the model for draft.
c. Open the **Manufacturing** mode.
d. Add shrinkage.
e. Create workpiece.
f. Create parting surface.
g. Split volumes.
h. Create runners.
i. Create Waterlines.
j. Explode assembly.

When you start the Creo Parametric session, the first task is to set the working directory. Make sure the required working directory is selected.

Starting Creo Parametric and Opening a Model

1. Start Creo Parametric by double-clicking on the Creo Parametric icon on the desktop of your computer.

2. Choose the **Open** button in the **Home** tab; the **File Open** dialog box is displayed. Browse to the location where you have stored the downloaded file. Select *tut_2.prt* and choose the **Open** button in the dialog box to open the model.

Analyzing the Model for Draft Angles

1. Choose the **Mold/Cast** tool from the **Engineering** group of the **Applications** tab; the **Creo Parametric 5.0** window is displayed with the **Mold & Cast** tab chosen. Figure 16-7 shows the tools available in the **Mold & Cast** tab.

2. Choose the **Draft** tool from the **Analysis** group of the **Mold & Cast** tab; the **Draft Analysis** dialog box is displayed.

3. Select the model in the **Surface** collector by selecting **TUT_2.PRT** from the **Model Tree** after activating the **Surface** collector.

4. Clear the **Use the pull direction** check box and then click in the **Direction** collector. Next, select the **FRONT** datum plane in the **Model Tree**; the **Color Scale** dialog box is displayed.

5. Change the value of draft to **3** in the **Draft** edit box in the **Draft Analysis** dialog box, if not set by default. Next, expand the **Color Scale** dialog box by choosing the down arrow at the bottom right corner of the **Color Scale** dialog box. Next, change the value in the **Number** edit box of the **Settings** area to **3**.

   You will notice that the faces having positive draft and negative draft are displayed in blue and peach color respectively. Also, some faces with neutral draft angle are displayed in grey color. Figure 16-30 shows the model after draft analysis.

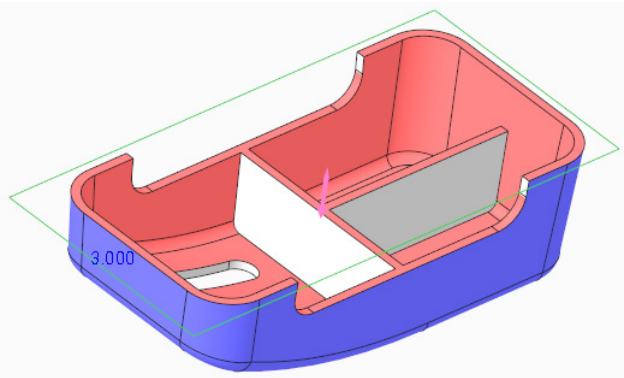

Figure 16-30 *Model after draft analysis*

6. Choose the **OK** button from the **Draft Analysis** dialog box and save the file. Choose the **Close** button from the **Quick Access** toolbar to close the current file.

Starting the Manufacturing Mode

1. Choose the **New** button from the **Data** group; the **New** dialog box is displayed. Select the **Manufacturing** radio button from the **Type** area of the **New** dialog box and select the **Mold cavity** radio button from the **Sub-type** area; the default name of the sketch appears in the **Name** edit box.

2. Enter *c16tut2* in the **File name** edit box and clear the **Use default template** check box. Next, choose the **OK** button; the **New File Options** dialog box is displayed.

3. Choose the **mmns_mfg_mold** option and then choose the **OK** button; the Mold environment of the **Manufacturing** mode is activated.

Importing the Model

1. Choose the **Locate Reference Model** tool from the **Reference Model** drop-down in the **Reference Model & Workpiece** group of the **Mold** tab; the **Open** dialog box is displayed. Select *tut_2.prt* and choose the **Open** button in the dialog box to open the model; the **Create Reference Model** dialog box is displayed.

2. Select the **Same model** radio button from the **Reference model type** area in the **Create Reference Model** dialog box and choose the **OK** button; the **Layout** dialog box is displayed. Choose the **OK** button and then choose the **Done/Return** option from the **Menu Manager**. The inserted part is displayed in the drawing area with the **PULL DIRECTION** arrow along the z-axis, as shown in Figure 16-31.

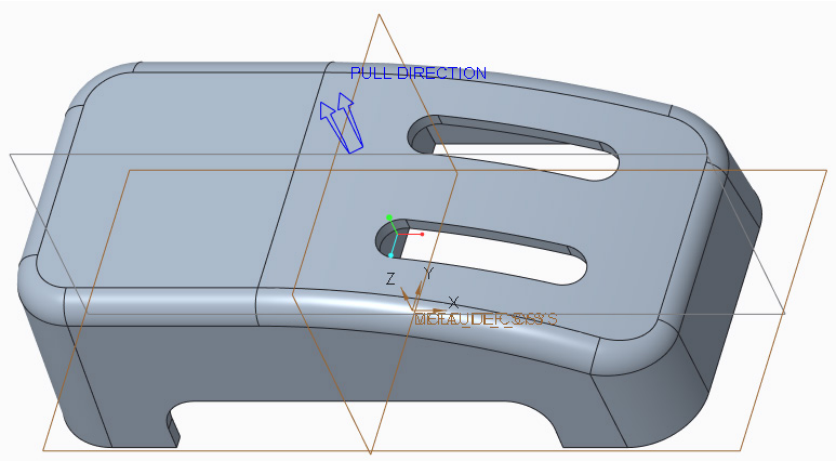

Figure 16-31 *Model after inserting in the Mold environment*

Adding Shrinkage

Before proceeding further, you need to add shrinkage factor to the model. As discussed earlier, the scaling of the model is done in order to create core and cavity larger than the component to be manufactured as the component shrinks after solidification. The shrinkage factor always depends on the material to be used for molding or casting and also on the type of mold.

1. Choose the **Shrink by scale** tool from the **Shrinkage** drop-down in the **Modifiers** group; the **Shrinkage By Scale** dialog box is displayed.

2. Select the **DEFAULT_CSYS** coordinate system from the drawing area. Next, enter **0.01** in the **Shrink Ratio** edit box of the **Shrinkage By Scale** dialog box and choose the ✓ button.

Creating the Workpiece

Now, you need to create a workpiece. Workpiece is needed to create core and cavity to complete the mold process.

1. Choose the **Automatic Workpiece** tool from the **Workpiece** drop-down in the **Reference Model & Workpiece** group; the **Automatic Workpiece** dialog box is displayed.

2. Select the **MOLD_DEF_CSYS** coordinate system from the **Model Tree**. Then enter **80** in the **Uniform Offsets** edit box in the **Offsets** area of the **Automatic Workpiece** dialog box and press ENTER. Next, choose the **OK** button.

   Figure 16-32 shows the model inside the workpiece. Clear visibility of all datums from the **Datum Display Filters** drop-down list in the **Graphics** toolbar.

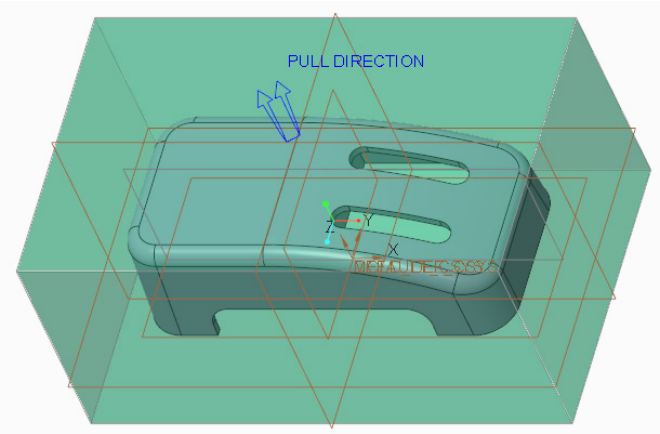

Figure 16-32 *Model inside the workpiece*

Creating a Parting Surface

In this tutorial, you will use the **Extend Curve** tool to create a parting surface.

1. Choose the **Parting Surface** tool from the **Parting Surface** drop-down in the **Parting Surface & Mold Volume** group; the **Parting Surface** dashboard is displayed.

2. Choose the **Extend Curve** tool from the **Surfacing** group of the **Parting Surface** dashboard; the **Extend Curve** dashboard is displayed, as shown in Figure 16-33.

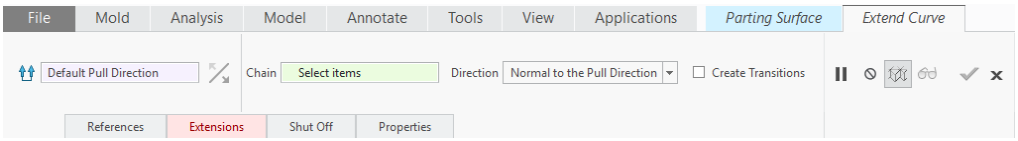

Figure 16-33 *Partial view of the* ***Extend Curve*** *dashboard*

3. Now, press the CTRL key and select all the edges of the bottom face which are highlighted in green color in the **Chain** collector in the drawing area, refer to Figure 16-34. Next, choose the **Extensions** tab of the **Extend Curve** dashboard; the **Extensions** slide-down panel is displayed.

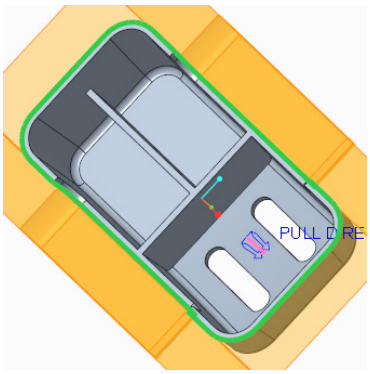

Figure 16-34 *Edges to be selected*

4. Select the **Perpendicular to boundary** radio button from the **Extensions** slide-down panel and choose the **OK** button from the **Extend Curve** dashboard; the extending surface is created, as shown in Figure 16-35.

   Now, you need to fill the slots present in the model.

5. Choose the **Fill Loops** tool from the **Surfacing** group of the **Parting Surface** dashboard; the **Fill Loops** dashboard is displayed. Next, select all the inner edges of both the slots by pressing the CTRL key in the **Chain** Collector from the drawing area and choose the **OK** button; slots are filled with surface, as shown in Figure 16-36.

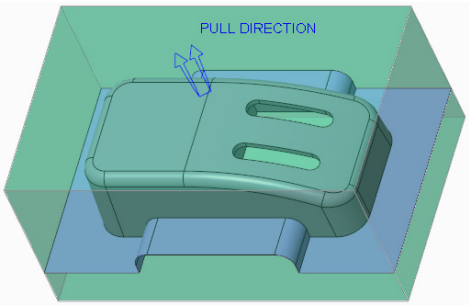

Figure 16-35 *Model after using the* ***Extend Curve*** *tool*

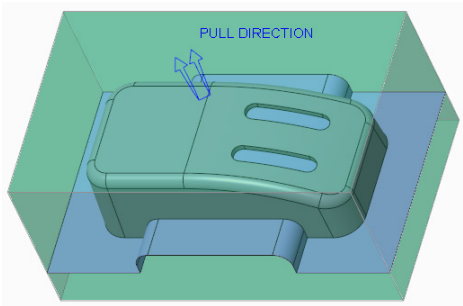

Figure 16-36 *Model after using the* ***Fill Loops*** *tool*

6. Choose the **OK** button from the **Controls** group of the **Parting Surface** dashboard; the parting surface is created, refer to Figure 16-36.

Splitting the Workpiece

To create core and cavity, you need to split the workpiece by using the parting surface. But before splitting the workpiece, you need to cutout the model from the workpiece.

1. Choose the **Refpart Cutout** tool from the **Parting Surface & Mold Volume** group of the **Mold** tab to cut the reference model from the workpiece; the **Refpart Cutout** dashboard is displayed. Next, choose the **OK** button to complete the cutout.

2. Choose the **Volume Split** tool from the **Mold Volume** drop-down of the **Parting Surface & Mold Volume** group; the **Volume Split** dashboard is displayed.

3. Click in the **Mold volume to split** collector and select **Refpart Cutout 1** from the **Model Tree**, if not already selected. Next, click in the **Parting surface for splitting the mold volume** collector and then select both the surfaces created as the parting surface from the drawing

area by pressing the CTRL key; you will notice that your model is highlighted in orange color.

4. Choose the **OK** button to complete the process.

Creating Core and Cavity

1. Choose the **Cavity insert** tool from the **Mold Component** drop-down of the **Components** group to create core and cavity for the reference model.; the **Create Mold Component** dialog box is displayed.

2. Choose the **Advanced** option of the **Create Mold Component** dialog box; the **Create Mold Component** dialog box gets expanded. Next, select **Volume_1** from the upper area of the **Create Mold Component** dialog box. Next, select **Volume_1** from the **Advanced** area and change the name **Volume_1** to **Core_2** in the **Name** edit box of the **Mold Component** area.

3. Similarly, change the name of **Volume_2** to **Cavity_2**.

4. Press the CTRL key, select **Volume_1** and **Volume_2** from the upper area of the **Create Mold Component** dialog box and choose the **OK** button; **Core_2** and **Cavity_2** are created and added to the **Model Tree**.

Creating Runner

As discussed earlier, runners are crucial part of the mold design because they are required to provide passage for molten material to flow in the mold. But before creating runner in the mold you need to hide all the parts except **Cavity_2** from the **Model Tree**.

1. Choose the **Runner** tool from the **Production Features** group to create runner in the mold; the **Runner** dialog box along with the **Menu Manager** is displayed.

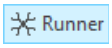

2. Select the **Round** option from the **Shape** rollout in the **Menu Manager**; the **Enter runner diameter** edit box is displayed. Enter **10** in this edit box and press ENTER.

3. Select the bottom face of **Cavity_2** as the sketching plane for runner, as shown in Figure 16-37. Next, choose the **Okay** option in the **DIRECTION** rollout of the **Menu Manager** and select the **Default** option from the **SKET VIEW** rollout of the **Menu Manager**; the sketcher environment gets activated.

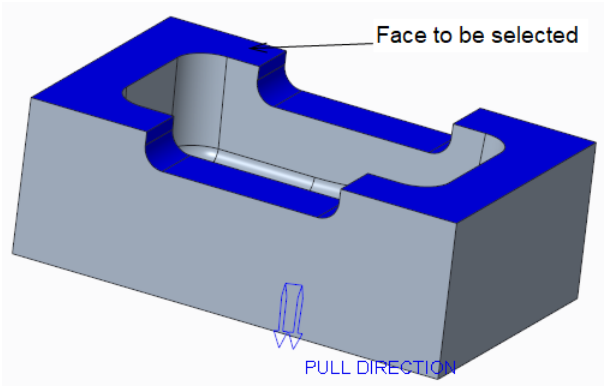

Figure 16-37 *Face to be selected as a sketching plane*

Now, you need to create a path for the runner by drawing a line in place of the runner. But first you need select two edges to make them reference axes for the sketch. Select any two edges to make reference axes.

4. Draw and dimension a line sketch, as shown in Figure 16-38 and choose the **OK** button from the **Sketch** dashboard; the **Intersected Components** dialog box is displayed.

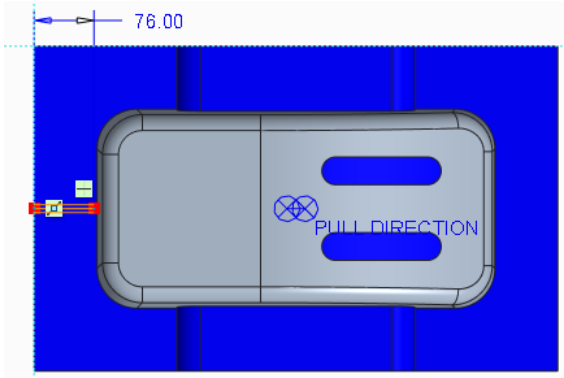

Figure 16-38 *Sketch for profile of the runner*

5. Select the **Automatic update** check box in the **Intersected Components** dialog box. Next, choose the button to select all the components that are going to intersect the runner after the procedure is complete and choose the **OK** button; the **Runner** dialog box is displayed. Choose the **OK** button to complete the procedure.

   You will notice that a cutout appears in the **Cavity_2**. Now, unhide **Core_2** from the **Model Tree**.

Creating Water Lines

Now, you need to add water lines to reduce the time consumed by molten plastic to solidify. But, first you need to create two datum planes to specify the location of water line.

1. Create one datum plane at an offset of **50 mm** from the top surface of the workpiece towards Core. Similarly, create another plane at an offset of **50 mm** from the bottom face of the workpiece towards Cavity.

   Now, select **Core_2** and **Cavity_2** from the **Model Tree** and change their visibility to transparent by choosing the **Transparent** option from the **Component Display Style** flyout in the expanded **Model Display** group of the **View** tab.

2. Choose the **Water Line** tool from the **Production Features** group of the **Mold** tab to create water lines; the **Enter diameter of waterline circuit** edit box along with the **Water Line** dialog box is displayed.

3. Enter **10** as a value of diameter in the **Enter diameter of waterline circuit** edit box and press ENTER; the **Menu Manager** is displayed. Next, select **ADTM1** as the sketching plane from the **Model Tree** for water line. Next, choose the **Default** option from the **SKET VIEW** rollout of the **Menu Manager**; the sketcher environment gets activated.

   Now, you need to create circuit for the water line by drawing lines in place of water lines. But first you need to select two edges to make them reference axes for the sketch. Select any two edges to make them reference axes.

4. Draw and dimension a line sketch, as shown in Figure 16-39 and choose the **OK** button from the **Sketch** dashboard; the **Intersected Components** dialog box is displayed.

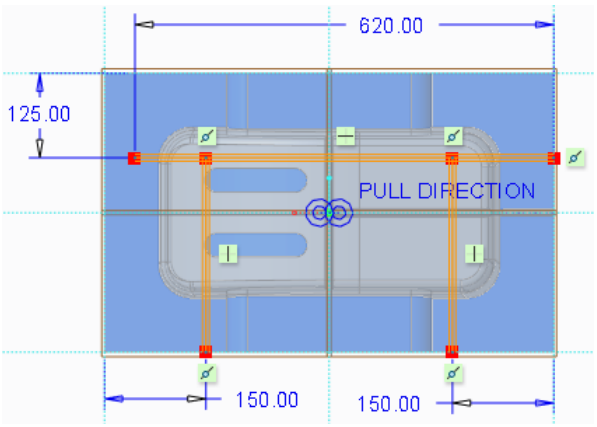

Figure 16-39 *Sketch for circuit of the water lines*

5. Select the **Automatic update** check box in the **Intersected Components** dialog box. Next, choose the button to select all the components that are going to intersect the water lines after the procedure is completed and choose the **OK** button; the **Water Line** dialog box is displayed. Choose the **OK** button to complete the procedure.

   Now, you need to create water lines in Core part.

6. Choose the **Water Line** tool from the **Production Features** group to create water lines; the **Enter diameter of waterline circuit** edit box along with the **Water Line** dialog box is displayed.

7. Enter **10** as the value of diameter in the **Enter diameter of waterline circuit** edit box and press ENTER; the **Menu Manager** is displayed. Select **ADTM2** as the sketching plane for water line. Next, choose the **Default** option from the **SKET VIEW** rollout of the **Menu Manager**; the sketcher environment gets activated.

   Now, you need to create circuit for the water line by drawing lines in place of water lines. But first you need to select two edges to make them reference axes for the sketch. Select any two edges to make them reference axes. Next, follow steps 4 and 5 to complete the procedure.

   Water lines are created, as shown in Figure 16-40. Now, change the visibility of the **Core_2** and **Cavity_2** back to Shaded.

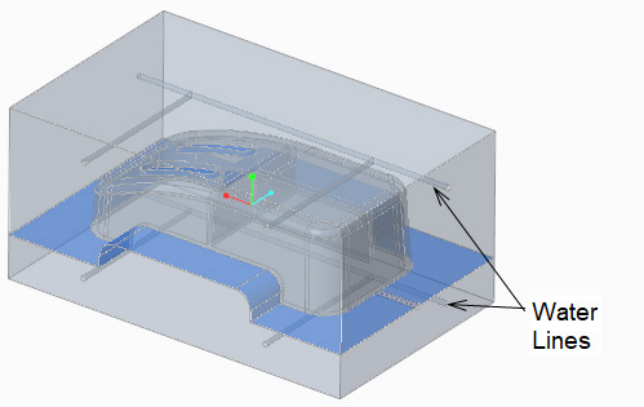

Figure 16-40 *Mold with water lines*

Creating Mold Component

Now, you need to fill the core and cavity parts to create a mold component.

1. Choose the **Create Molding** tool from the **Components** group to create mold component; the **Enter Part name** edit box is displayed.

2. Enter **Molding** as the part name in the **Enter Part name** edit box and press ENTER; another edit box is displayed. Accept the default value in the edit box and press ENTER. The mold component is created.

Exploding the Mold Assembly

Now, you need to explode the mold assembly you have created.

1. Choose the **Mold Opening** tool from the **Analysis** group to explode the mold assembly; the **Menu Manager** is displayed.

2. Select the **Define Step** option from the **MOLD OPEN** rollout of the **Menu Manager**; the **Menu Manager** gets modified. Next, choose the **Define Move** option from the **DEFINE STEP** rollout and select **Cavity_2** from the drawing area and press the middle mouse button.

3. Select an edge, as shown in Figure 16-41; you are prompted to enter the movement displacement. Enter **250** and press ENTER. Next, choose the **Done** option from the **Menu Manager**; the **Cavity_2** moves upward, refer to Figure 16-41.

   Similarly, you need to move **Core_2** from the assembly too.

4. Repeat step 2 and select **Core_2** from the drawing area instead of **Cavity_2**.

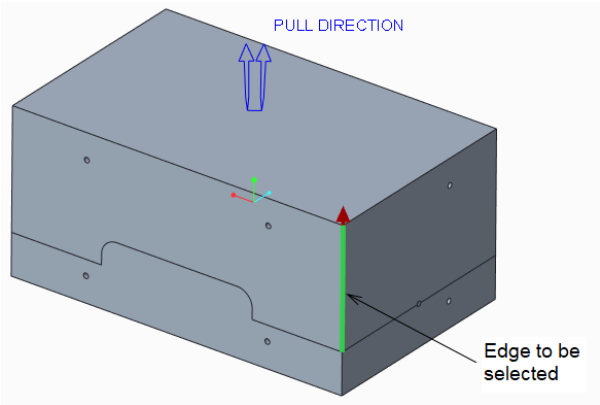

Figure 16-41 *Edge to be selected*

5. Select an edge, as shown in Figure 16-42; you are prompted to enter the movement displacement. Enter **-250** and press ENTER. Next, choose the **Done** option from the **Menu Manager**; the mold assembly gets exploded, refer to Figure 16-43.

6. Choose the **Done/Return** option from the **Menu Manager** to exit the **Mold Opening** tool.

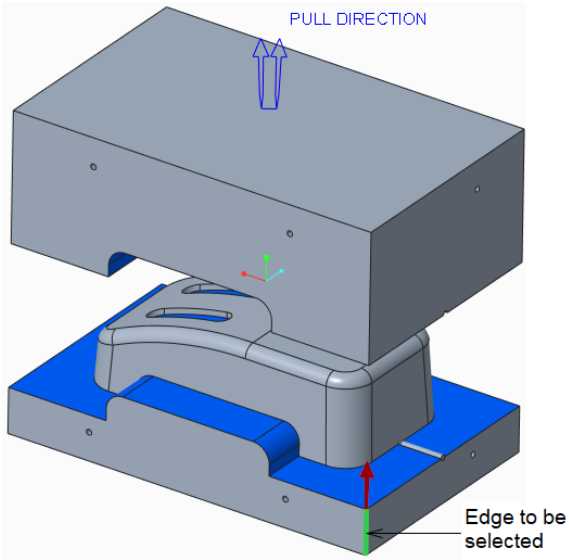

Figure 16-42 *Edge to be selected*

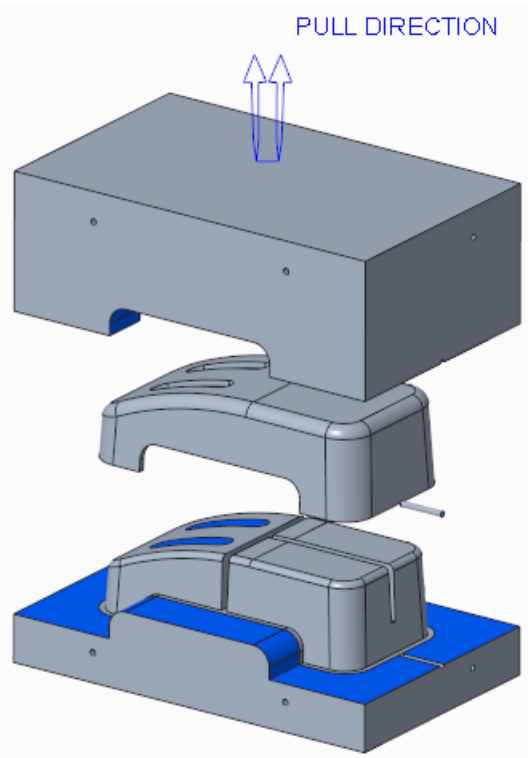

Figure 16-43 *Exploded view of the mold assembly*

Saving and Closing the Model

Now, you need to save the model.

1. Choose the **Save** button from the **File** menu and save the model. Then choose the **Close** button to exit.

Self-Evaluation Test

Answer the following questions and then compare them to those given at the end of this chapter:

1. The _____ tool is used to split workpiece into core and cavity.

2. The_____ tool is used to analyze the draft of the part.

3. The _____ is the female part of the mold; it is hollow from inside and the molten metal or the model plastic is poured into it so that it can take the shape of the cavity to create the component.

4. Shrinkage is used to apply scale factor to the component. (T/F)

5. The **Fill Loops** tool is used to create the surface to close the openings in the model. (T/F)

Review Questions

Answer the following questions:

1. The _____ tool is used to create molding.

2. Silhouette curves are required to create parting surface by using the _____ tool.

3. The _____ tool is used to add cooling channels to core and cavity.

4. You cannot create a parting surface without creating the silhouette curve first. (T/F)

5. The **Cavity insert** tool is used to insert core and cavity. (T/F)

EXERCISES

To perform these exercises, you need to download the zipped file named as *c16_creo_5.0_input* from the **Input Files** section of the CADCIM website. The complete path for downloading the file is:

Textbooks > CAD/CAM > Creo Parametric > Creo Parametric 5.0 for Designers 5th Edition > Input Files > C16_creo_5.0_input

After the file is downloaded, extract the folder to the location C:\Creo Parametric\ and rename it as c16.

Exercise 1

Create the mold design of the model shown in Figure 16-44. **(Expected time: 60 min)**

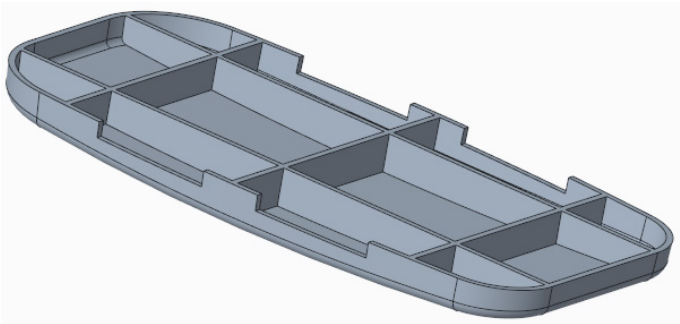

Figure 16-44 *Model for Exercise 1*

Exercise 2

Create the mold design of the model shown in Figure 16-45. **(Expected time: 60 min)**

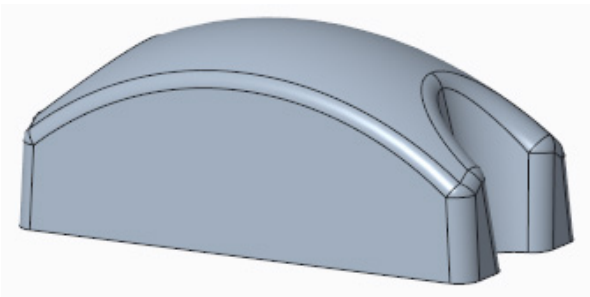

Figure 16-45 *Model for Exercise 2*

Answers to Self-Evaluation Test

1. Volume Split, **2. Draft**, **3.** cavity, **4.** T, **5.** T