Chapter 17

Working with Advanced Drawing Options

CHAPTER OBJECTIVES

In this chapter, you will learn:

- *To define multiline style and specify the properties of multilines using the MLSTYLE command.*
- *To draw various types of multilines using the MLINE command.*
- *To edit multilines using the MLEDIT command.*
- *To draw NURBS splines using the Spline tool.*
- *To edit NURBS splines using the Edit Spline tool.*

KEY TERMS

- *Multiline*
- *MLEDIT*
- *Revision Cloud*
- *Wipeout*
- *Spline*
- *Fit Points*
- *CV*
- *Knots*
- *Kink*
- *Weight*

UNDERSTANDING THE USE OF MULTILINES

The **Multiline** feature allows you to draw composite lines that consist of multiple parallel lines. Multilines consist of parallel lines, which are called elements. You can draw these lines with the **MLINE** command. Before drawing multilines, you need to set the multiline styles. This can be accomplished by using the **MLSTYLE** command. Also, you can edit multilines by using the **MLEDIT** command.

DEFINING THE MULTILINE STYLE

Menu Bar: Format > Multiline Style **Command:** MLSTYLE

You can create the style of multilines by using the **MLSTYLE** command. You can specify the number of elements in a multiline and the properties of each element. The style also controls the start and end caps, the start and end lines, and the color of multilines and fill. When you invoke this command, AutoCAD LT displays the **Multiline Style** dialog box (Figure 17-1). Using this dialog box, you can set the spacing between parallel lines, specify linetype pattern, set colors, solid fill, and capping arrangements. By default, the multiline style (STANDARD) has two lines that are offset at 0.5 and -0.5.

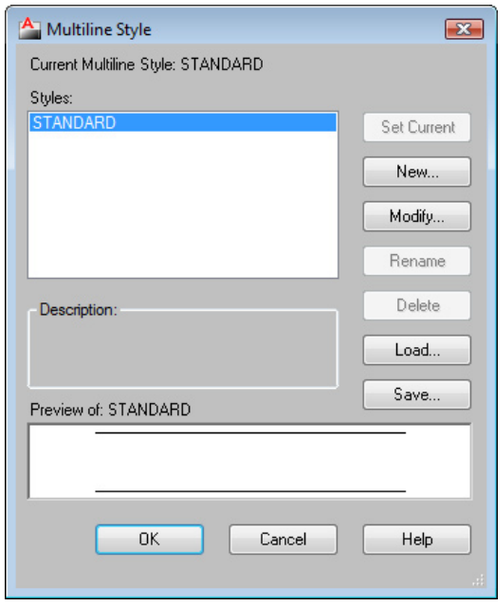

Figure 17-1 *The* ***Multiline Style*** *dialog box*

Note

You cannot modify the style of a multiline that is used in the current drawing. You first need to delete the multiline from all the places where it is used and then you can modify its style.

Styles List Box

The **Styles** list box displays the names of the styles. By default, the **STANDARD** style is available in this list box. If several styles have been defined, all of them will be listed in this list box.

Set Current

If several styles have been defined, select a style from the **Styles** list box and choose the **Set Current** button to make the style as the current style. The current multiline style is saved in the **CMLSTYLE** system variable.

New

The **New** button is chosen to create a new multiline style. On choosing this button, the **Create New Multiline Style** dialog box will be displayed, as shown in Figure 17-2. The **New Style Name** edit box is used to specify the name of the new multiline style you want to define. The **Start With** drop-down list will be available only if some styles have already been defined. You can select an existing style as a reference to create the new style. The new style will start with the properties associated with the style selected from the **Start With** drop-down list. As soon as you specify the name of the new style, the **Continue** button is highlighted. To create a new style, enter the name of the new style in the **New Style Name** edit box and then choose the **Continue** button; the **New Multiline Style** dialog box will be displayed, as shown in Figure 17-3.

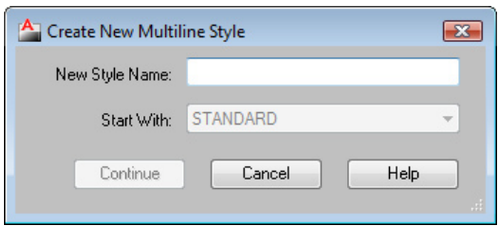

*Figure 17-2 The **Create New Multiline Style** dialog box*

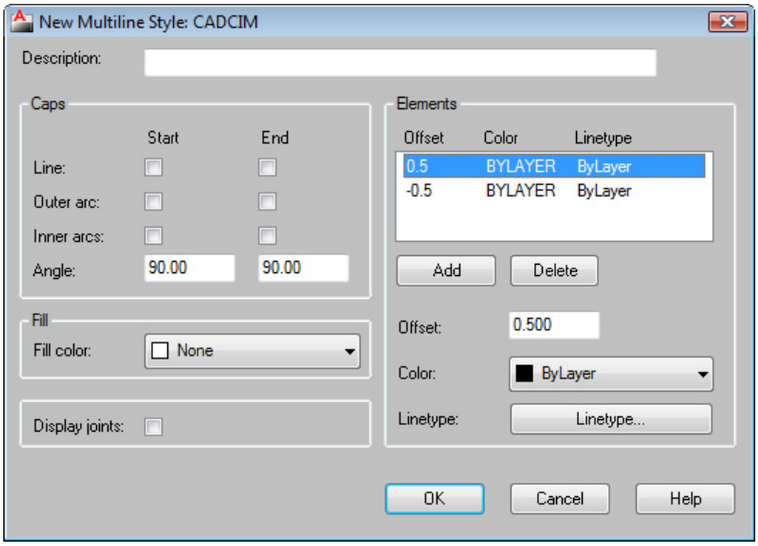

*Figure 17-3 The **New Multiline Style** dialog box*

The title bar of the **New Multiline Style** dialog box displays the name of the new style. By default, some properties in the dialog box are defined at some preset values. These values correspond to the selection made in the **Start With** drop-down list.

Description

This edit box used to specify the description of the new multiline style. The description, including spaces, can be up to 255 characters long. Giving information in this edit box is optional so you can leave it blank if you want.

Caps Area

The options under this area are used to set the type and location of the start and end caps of the multilines. These options are discussed next.

Line. Selecting the **Start** and **End** check boxes of this option caps the multiline with a line at the start point and the endpoint (Figure 17-4).

Outer arc. Selecting the **Start** and **End** check boxes of this option draws a semicircular arc between the endpoints of the outermost lines (Figure 17-4).

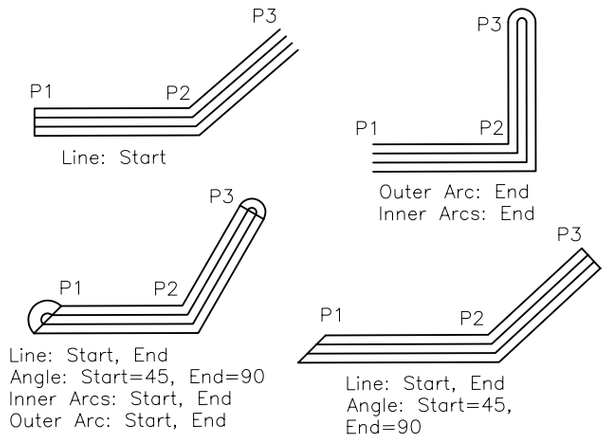

Figure 17-4 *Drawing multilines with different end cap specifications*

Inner arcs. This option is used to draw a semicircular arc between the two innermost lines at the start point and endpoint of a multiline. The arc is drawn between the even-numbered inner lines (Figure 17-4). For example, if there are two inner lines, an arc will be drawn at their ends. On the other hand, if there are three inner lines, the two outer lines are capped with the arc and the middle line is not capped.

Angle. By default, the end caps of a multiline are drawn tangentially to the multiline elements, that is, the angle the cap makes with the multiline elements is 90 degree. You can control the cap angle at the start and end of a multiline by entering angles in the corresponding **Angle** edit boxes (Figure 17-4). This angle can be between 10 degree and 170 degree.

Fill Area

The options under this area are used to fill the multiline with a specified color. By default, **None** is selected in the **Fill color** drop-down list. As a result, there is no fill effect in the multiline. To specify a fill color, select it from this drop-down list. Selecting the **Select Color** option displays the **Select Color** dialog box, wherein you can select additional colors.

Display joints

If you select the **Display joints** check box, AutoCAD LT will draw a line across all elements of the multiline at the vertex points, where the multiline changes direction. The joints of the multiline are also called miter joints. If you draw only one multiline segment, no line is drawn at the miter joint.

Elements Area

The options in this area modify the element properties of the multiline style. The element properties include the number of lines, color, and linetype of the lines comprising the multiline. The following options are available for setting the properties of the individual lines (elements) that constitute the multiline.

Offset, Color, and Linetype

This list box displays the offset, color, and linetype of each line that constitutes the current multiline style. The lines are always listed in the descending order, based on the offset distance. For example, a line with a 0.5 offset will be listed first and a line with a 0.25 offset will be listed next. You can select an element to be modified from the list box; the selected element is highlighted.

Add

This button allows you to add new lines to the current line style. The maximum number of lines that you can add is 16. When you choose the **Add** button, AutoCAD LT inserts a line with the offset distance of 0.0, **Color** = BYLAYER, and **Linetype** = Bylayer. The new element gets added between two existing elements. After the line is added, you can change its offset distance, color, or linetype. The offset distance can be entered in the **Offset** edit box. Similarly, you can select the options in the **Color** drop-down list to specify a color for the selected element of the multiline. Also, you can choose the **Linetype** button to display the **Select Linetype** dialog box. You can use this dialog box and its options to load and select the linetype you want to apply to the selected element of a multiline.

Delete

This button allows you to delete a selected element from the multiline style. The highlighted element is removed from the **Elements** list box.

Offset

This edit box allows you to change the offset distance of the selected line in the **Elements** list box. The offset distance is defined with respect to the origin (0,0). The offset distance can be a positive or a negative value, which enables you to center the lines.

Color

This drop-down list allows you to assign a color to the selected line. When you choose the **Select Color** option from the drop-down list, AutoCAD LT displays the **Select Color** dialog box. You can select a color from the dialog box or enter a color number or name in the **Color** edit box.

Linetype

This button allows you to assign a linetype to the selected line. When you choose this button, AutoCAD LT displays the **Select Linetype** dialog box. After selecting a linetype in this dialog box, choose **OK** to exit. You can also choose the **Load** button in the **Select Linetype** dialog box to display the **Load or Reload Linetypes** dialog box, where you can select a linetype you want to use. The selected linetype is displayed in the **Loaded Linetype** list box of the **Select Linetype** dialog box. You can now select the specific linetype and apply it to a selected element of a multiline.

After you have added the elements to a multiline and set their properties, choose **OK** button to exit the **New Multiline Style** dialog box. An image of the current multiline style is displayed in the **Preview of** area in the **Multiline Style** dialog box. The new style is now listed in the **Style** list box.

Load

Choose this button from the **Multiline Style** dialog box to load a multiline style from an external multiline library file (*acad.mln*). On choosing this button, the **Load Multiline Styles** dialog box will be displayed, as shown in Figure 17-5. This dialog box displays all multiline styles available in the current *mln* directory. If the style is saved in another directory or file, choose the **File** button to display the **Load Multiline Style From File** dialog box and then select the multiline file that you want to load. Once the file is loaded, all styles saved under it are displayed in the list box. You can select the style and then choose **OK** to make it current.

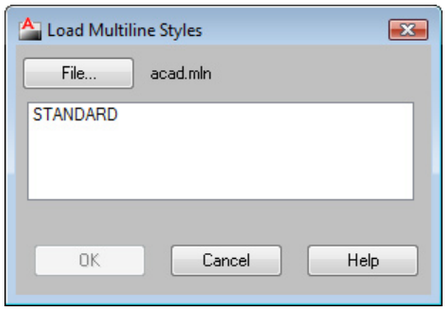

Figure 17-5 *The* ***Load Multiline Styles*** *dialog box*

Save

This button lets you save a multiline style to an external file (*.mln*). When you choose this button, AutoCAD LT displays the **Save Multiline Style** dialog box. This dialog box lists the names of the available predefined multiline style files (*.mln*). From the file listing, select or enter the name of the file where you want to save the current multiline style and choose the **Save** button. By default, the multiline styles get saved in the *acad.mln* file at the location *C:\Users\<user name>\AppData\Roaming\Autodesk\AutoCAD LT 2013\R19.0\enu\Support*.

Rename

This button allows you to rename the current multiline style. To do so, select the multiline style to be renamed and choose the **Rename** button; the text will be displayed in an edit box. Rename the text and click once on the list box. Note you cannot rename the **STANDARD** multiline style.

Preview of Area

The **Multiline Style** dialog box also displays the current multiline configuration in the **Preview of** area. The panel will display the color, linetype, caps and relative spacing of the lines. As you select another multiline style, the image in the preview area also gets updated accordingly. The name of the multiline style whose preview is being shown is displayed above the **Preview of** area.

DRAWING MULTILINES

Menu Bar: Draw > Multilines **Command:** MLINE or ML

The **MLINE** command is used to draw multilines. The following is the prompt sequence for the **MLINE** command:

Current settings: Justification = Top, Scale = 1.00, Style = STANDARD
Specify start point or [Justification/Scale/STyle]: *Select a start point or enter an option.*
Specify next point: *Select the second point.*
Specify next point or [Undo]: *Select the next point or enter **U** for undo.*
Specify next point or [Close/Undo]: *Select the next point, enter **U**, or enter **C** for close. You can also right-click to display the shortcut menu and choose **Enter**, **Cancel**, **Recent Input**, **Dynamic Input Close**, **Undo**, **Snap overrides**, **Pan, Zoom**, **SteeringWheels**, or **Quick calc**.*

When you invoke the **MLINE** command, it always displays the current status of the multiline justification, scale, and style name. Remember that all line segments created in a single **MLINE** command are a single entity. The options provided under this command are discussed next.

Justification Option

The justification determines how a multiline is drawn between the specified points. Three justifications are available for the **MLINE** command. They are **Top**, **Zero**, and **Bottom**.

Top

This justification produces a multiline in which the top line coincides with the points you selected on the screen. Since the line offsets in a multiline are arranged in descending order, the line with the largest positive offset will coincide with the selected points. This is the default justification option, see Figure 17-6.

Zero

This option will produce a multiline in which the zero offset position of the multiline coincides with the selected points. Multilines will be centered if the positive and negative offsets are equal, see Figure 17-6.

Bottom

This option will produce a multiline in which the bottom line (the line with the least offset distance) coincides with the selected point when the line is drawn from the left to right, see Figure 17-6.

Scale Option

The **Scale** option is used to change the scale of a multiline. For example, if the scale factor is 0.5, the distance between the lines (offset distance) will be reduced to half, as shown in Figure 17-7. Therefore, the width of the multiline will be half of what was defined in the multiline style. A negative scale factor will reverse the order of the offset lines. The multilines will now be drawn such that the line with the maximum negative offset distance is at the top and the line with the maximum positive offset distance is at the bottom. For example, if you enter a scale factor of -0.5, the order in which the lines are drawn will be reversed, and the offset distances will be reduced by half. Here it is assumed that the lines are drawn from left to right. If the lines are drawn from right to left, the offsets are reversed. Also, if the scale factor is 0, AutoCAD LT forces the multiline into a single line. However, the line will still possess the properties of a multiline. This scale factor does not affect the linetype scale factor (**LTSCALE**).

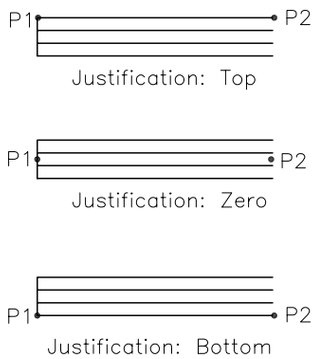

Figure 17-6 *Justifications in multilines*

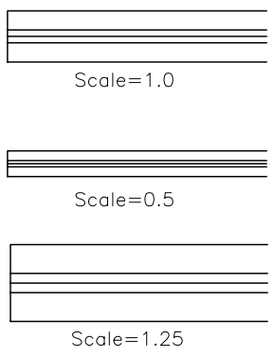

Figure 17-7 *Different multiline scales*

STyle Option

The **STyle** option allows you to change the current multiline style. The style must be defined before using the **STyle** option to change the style.

Note

All options explained above are available at the dynamic prompt. To access the options through dynamic prompt, press the down arrow key from the keyboard whenever dynamic prompting is available at the cursor. Now, select the option using the cursor.

EDITING MULTILINES BY USING GRIPS

Multilines can be easily edited using grips. When you select a multiline, the grips appear at the endpoints, based on the justification used when drawing multilines. For example, if the multilines are top-justified, the grips will be displayed at the endpoint of the first (top) line segment. Similarly, for zero and bottom-justified multilines, the grips are displayed on the centerline and bottom line, respectively.

Note

*Multilines do not support certain editing commands such as **BREAK**, **CHAMFER**, and **FILLET**. However, commands such as **COPY**, **MOVE**, **ROTATE**, **MIRROR**, **STRETCH**, **SCALE**, and **EXPLODE** as well as most object snap modes can be used with multilines.*

Tip
*You must use the **MLEDIT** command to edit multilines. The **MLEDIT** command has several options that make it easier to edit these lines.*

EDITING MULTILINES BY USING THE DIALOG BOX

Menu Bar: Modify > Object > Multiline **Command:** MLEDIT

When you invoke the **MLEDIT** command, AutoCAD LT displays the **Multilines Edit Tools** dialog box, see Figure 17-8. This dialog box contains five basic editing tools. To edit a multiline, first select the editing operation you want to perform by clicking on the image tile. Once you have selected the editing option, AutoCAD LT will prompt you to select the first and second multilines. After editing one set of multilines, you will be prompted again to select the first multiline or undo the last editing. Press ENTER to exit this command after you have finished the editing.

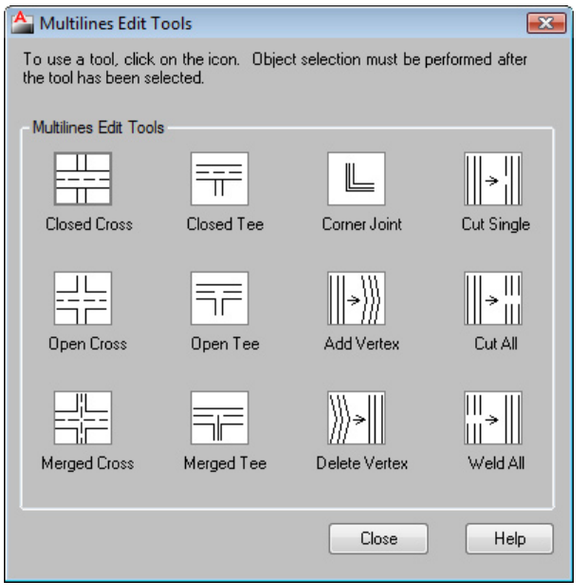

***Figure 17-8** The **Multilines Edit Tools** dialog box*

The following is the list of options for editing multilines:

Cross Intersection
Closed Cross (CC), Open Cross (OC), Merged Cross (MC)

Tee Intersection
Closed Tee (CT), Open Tee (OT), Merged Tee (MT)

Adding and Deleting Vertices
Add Vertex (AV), Delete Vertex (DV)

Cutting and Welding Multilines
Cut Single (CS), Cut All (CA), Weld All (WA)

Cross Intersection (CC/OC/MC)

With the **MLEDIT** command options, you can create three types of cross intersections: closed, open, and merged. You must be careful about the order in which you select multilines for

editing. The order in which multilines are selected determines the edited shape of a multiline (Figure 17-9). The cross intersection can belong to a self-intersecting multiline or two different multilines.

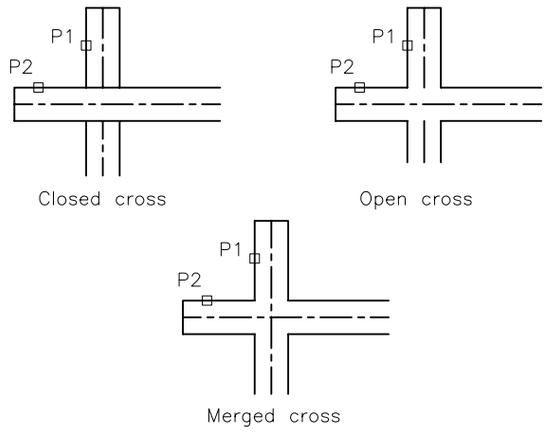

Figure 17-9 *Three types of cross intersections*

When you invoke the **MLEDIT** command, the **Multilines Edit Tools** dialog box is displayed. Choose the **Closed Cross** image tile; the dialog box disappears from the screen and the following prompts appear in the Command prompt:

Select first mline: *Select the first multiline.*
Select second mline: *Select the second multiline.*
Select first mline or [Undo]: *Select another multiline, press ENTER to end the command, or enter **U** to undo the last operation.*

If you enter **U**, AutoCAD LT will undo the last editing operation and prompt you to select the first multiline. However, if you do not enter **U** and select another multiline, AutoCAD LT will prompt you to select the second multiline.

Tee Intersection (CT/OT/MT)

With the **MLEDIT** command options, you can create three types of tee-shaped intersections: closed, open, and merged. As with the cross intersection, you must be careful how you select the objects because the order in which you select them determines the edited shape of a multiline (Figure 17-10). The prompt sequence for the tee intersection is the same as that for the cross intersection.

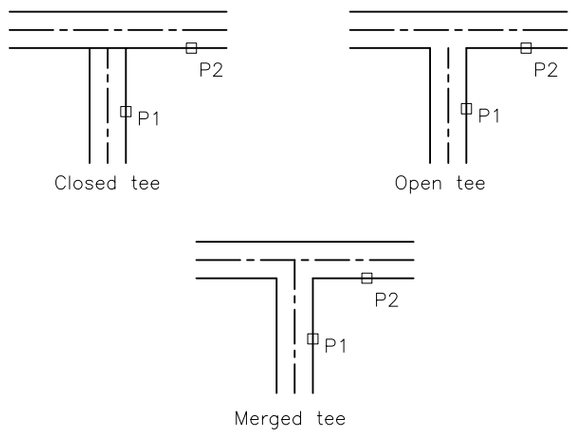

Figure 17-10 *Three types of tee intersections*

When you invoke the **MLEDIT** command, the **Multilines Edit Tools** dialog box is displayed. Choose the **Closed Tee** image tile; the dialog box disappears from the screen and the following prompts appear in the Command prompt.

Select first mline: *Select the first multiline.*
Select second mline: *Select the intersecting multiline.*
Select first mline or [Undo]: *Select another multiline, enter **U** to undo the last operation, or press ENTER to end the command.*

Corner Joint (CJ)

The **Corner Joint** option is used to create a corner joint between the two selected multilines. The multilines must be two separate objects (multilines) or self-intersecting multilines (Figure 17-11). When you specify two multilines, AutoCAD LT trims or extends the first multiline to intersect with the second one. The prompt sequence that follows when you invoke this option is given next.

Select first mline: *Select the multiline to trim or extend.*
Select second mline: *Select the intersecting multiline.*
Select first mline or [Undo]: *Select another multiline, enter **U** to undo the last operation, or press ENTER to end the command.*

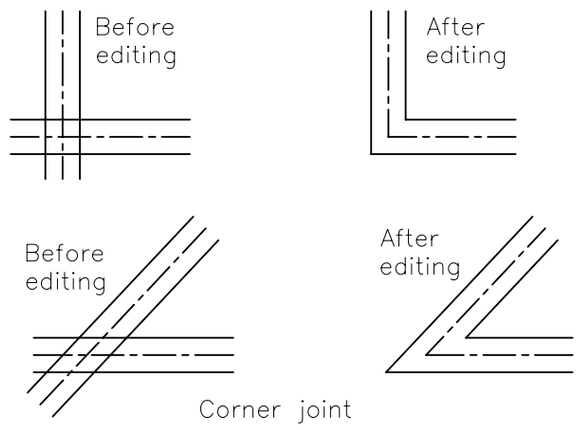

Figure 17-11 *Editing corner joints*

Adding and Deleting Vertices (AV/DV)

You can use the **MLEDIT** command to add or delete the vertices of a multiline (Figure 17-12). When you select a multiline for adding a vertex, AutoCAD LT inserts a vertex point at the point where you clicked on the object while selecting it. Later, you can move the vertex by using grips. Similarly, you can also use the **MLEDIT** command to delete vertices by selecting the object whose vertex point you want to delete. AutoCAD LT removes the vertex that is nearest to the point where you click to select the multiline segment.

When you invoke the **MLEDIT** command, the **Multilines Edit Tools** dialog box is displayed. Choose the **Add Vertex** image tile; the dialog box is removed from the screen and the following prompts appear in the Command prompt.

Select mline: *Select the multiline for adding vertex.*
Select mline or [Undo]: *Select another multiline for modifications; enter **U** to undo the last operation, or press ENTER to exit the command.*

A same prompt sequence appears at the Command prompt when you use the **Delete Vertex** option.

Cutting and Welding Multilines (CS/CA/WA)

You can also use the **MLEDIT** command to cut or weld multilines. When you cut a multiline, it does not create two separate multilines. They continue to be a part of the same object (multiline). You can cut away an area from any of the elements of a multiline or from the entire multiline. Also, the points selected for cutting the multiline do not have to be on the same element of the multiline (Figure 17-13). You can select the two points that define the cut on different elements of the multiline. When cutting a single element of the multiline, if you select the two cut points on different elements, the element you selected first gets cut by the distance defined by the two points.

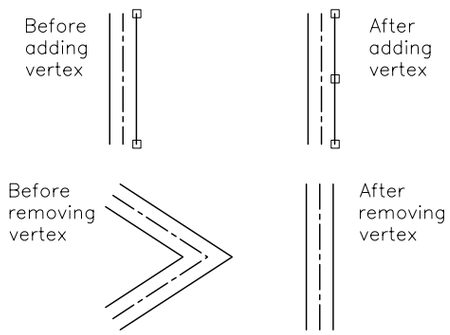

Figure 17-12 *Adding and deleting vertices*

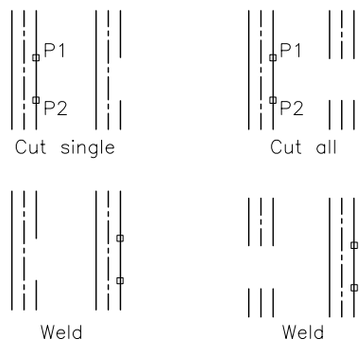

Figure 17-13 *Cutting and welding multilines*

In the **Multilines Edit Tools** dialog box, choose the **Cut Single** image tile; the dialog box is removed from the screen, and the following prompts appear in the Command prompt.

Select mline: Select the multiline.
(The point where you select the multiline specifies the first cut point.)
Select second point: *Select the second cut point*.
Select mline or [Undo]: *Select another multiline to cut, enter **U** to undo the last operation, or press ENTER to exit the command.*

The **Weld** option reconnects the multilines that have been cut by using the **Cut Single** or **Cut All** option of the **MLEDIT** command (Figure 17-13). You cannot weld or join separate multilines. In the **Multilines Edit Tools** dialog box, choose the **Weld All** image tile; the dialog box is removed from the screen, and the following prompts appear in the Command prompt.

Select mline: *Select the multiline*.
Select second point: *Select a point on the other side of the cut*.
Select mline or [Undo]: *Select another multiline to modify, enter U to undo the last operation, or press ENTER to exit the command.*

Note

*The following system variables store values for various aspects of multilines. The **CMLJUST** variable stores the justification of the current multiline (0-Top, 1-Middle, 2-Bottom). The **CMLSCALE** variable stores the scale of the current multiline (Default scale = 1.0000) and the **CMLSTYLE** variable stores the name of the current multiline style (Default style = STANDARD).*

Tip

You can also edit multilines by entering the ***-MLEDIT*** *command at the pointer input. All options are displayed at the dynamic prompt, see Figure 17-14.*

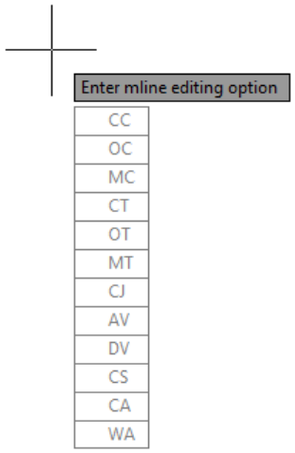

Figure 17-14 *Dynamic prompt for the* ***-MLEDIT*** *command*

EXAMPLE 1 — *MLINE*

In this example, you will create a multiline style that represents a wood-frame wall system. The wall system consists of ½" wallboard, 4 X ½" wood stud, and ½" wallboard.

1. Enter **MLSTYLE** at the Command prompt to display the **Multiline Style** dialog box. Also, the current style, **STANDARD** is displayed in the **Styles** list box.

2. Choose the **New** button to invoke the **Create New Multiline Style** dialog box. Enter **MYSTYLE** in the **New Style Name** edit box and choose **Continue** to display the **New Multiline Style: MYSTYLE** dialog box.

3. Enter **Wood-frame Wall System** in the **Description** edit box.

4. Select the **0.5** line definition in the **Elements** list box. In the **Offset** edit box, replace **0.500** with **1.00**. This redefines the first line which will now be 1.00" above the centerline of the wall.

5. Select the **-0.5** line definition in the **Elements** list box. In the **Offset** edit box, replace **-0.500** with **-1.00**. This redefines the second line which will now be placed 1.00" below the centerline of the wall.

6. Choose the **Add** button; a new line is added with offset value of 0 and is highlighted in the **Elements** list box.

7. In the **Offset** edit box, replace **0.000** with **1.50**.

8. Select **Yellow** from the **Color** drop-down list.

9. Repeat steps 6 through 8, but this time use the value **-1.50** in place of **1.50** in step 7 to add another line to the current multiline style. The color of this line should be red.

10. Choose the **OK** button and return to the **Multiline Style** dialog box. The new multiline style is displayed in the **Preview of** area.

11. Choose the **Set Current** button to make the **MYSTYLE** as current style.

12. Choose the **OK** button from the **Multiline Style** dialog box to return to the drawing area. To test the new multiline style, use the **MLINE** command and draw a series of lines (Figure 17-15).

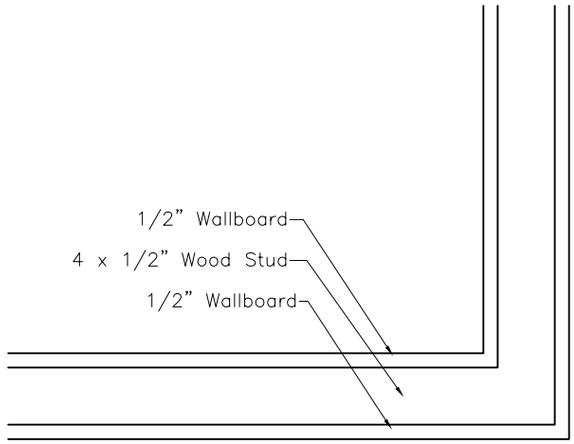

Figure 17-15 *Multiline style created for Example 1*

CREATING REVISION CLOUDS

Ribbon: Home > Draw > Revision Cloud or Annotate > MarkUp > Revision Cloud
Tool Palettes: Draw > Revision Cloud **Toolbar:** Draw > Revision Cloud
Menu Bar: Draw > Revision Cloud **Command:** REVCLOUD

The **Revision Cloud** tool in the **Draw** panel is used to create a cloud-shaped polyline, as shown in Figure 17-16. This tool can be used to highlight the details of a drawing. The prompt sequence that will follow when you choose this tool from the **Draw** panel is as follows:

Minimum arc length: 0.5000 Maximum arc length: 0.5000 Style: Normal
Specify start point or [Arc length/Object/Style] <Object>: *Specify the start point of the revision cloud.*
Guide crosshairs along cloud path...

As you move the cursor, different arcs of the cloud with varied radii are drawn. When the start point and endpoint meet, the revision cloud is completed and you get a message.

Revision cloud finished.

You can define the length of the arcs to be drawn using the **Arc length** option. Also, all the arcs drawn are of constant length. You can convert a closed loop into a revision cloud using the **Object** option. Note that the selected closed loop should be a single entity such as an ellipse, a circle, a rectangle, a polyline, and so on. The **Style** option is used to define the arc style for the revision cloud. The default style is **Normal** that creates a revision cloud similar to the one shown in Figure 17-16. You can change the style to **Calligraphy** to create a revision cloud similar to the one shown in Figure 17-17.

Note

*The **REVCLOUD** stores the last used arc length in the system registry. This value is multiplied by the **DIMSCALE** value to provide consistency when the program is used with drawings that have different scale factors.*

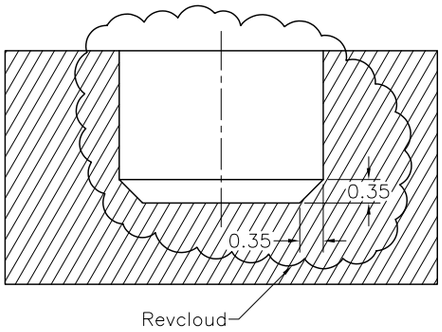

Figure 17-16 *Creating revcloud*

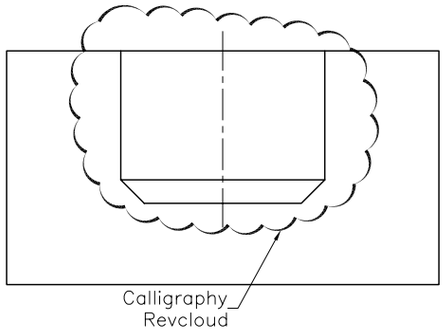

Figure 17-17 *Calligraphy revcloud*

CREATING WIPEOUTS

Ribbon: Home > Draw > Wipeout or Annotate > Markup > Wipeout
Command: WIPEOUT

The **Wipeout** tool is used to create a polygonal area to cover the existing objects with the current background color. The area defined by this command is governed by the wipeout frame. The frame can be turned on and off for editing and plotting the drawings, respectively. This tool can be used to add notes and details to a drawing. The prompt sequence that will follow when you choose the **Wipeout** tool from the **Draw** panel is as follows:

Specify first point or [Frames/Polyline] <Polyline>: *Specify the start point of the wipeout.*
Specify next point: *Specify the next point of the wipeout.*
Specify next point or [Undo]: *Specify the next point of the wipeout.*
Specify next point or [Close/Undo]: *Specify the next point of the wipeout.*

Figure 17-18 shows a drawing before creating a wipeout and Figure 17-19 shows a drawing after creating the wipeout.

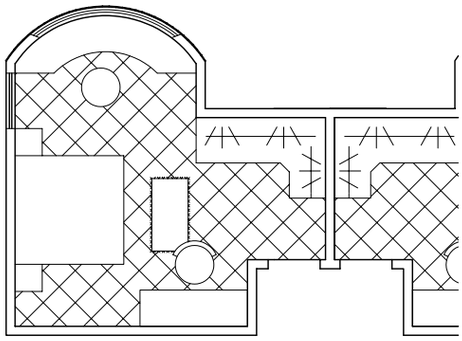

Figure 17-18 *Drawing before creating a wipeout*

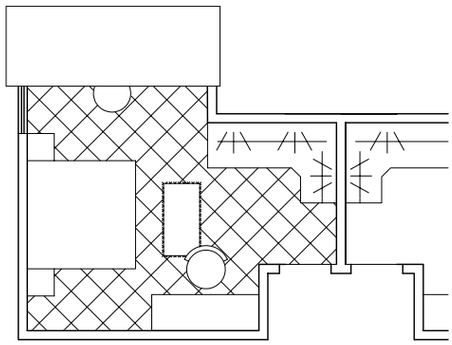

Figure 17-19 *Drawing after creating a wipeout*

If you do not want the frame of the wipeout to be displayed, enter **F** at the **Specify first point or [Frames/Polyline] <Polyline>** prompt and turn the frame off. The display of frames of all existing wipeouts will be turned off. Also, the display of frames of all new wipeouts will be turned off.

CREATING NURBS

Ribbon: Home > Draw > Spline Fit **Menu Bar:** Draw > Spline > Spline Fit
Tool Palettes: Draw > Spline **Toolbar:** Draw > Spline **Command:** SPLINE

The NURBS is an acronym for **Non-Uniform Rational Bezier-Spline**. These splines are considered true splines. In AutoCAD LT, you can create NURBS using the **Spline** tool. The spline created with the **Spline** tool is different from the spline created using the **Polyline** tool. The nonuniform aspect of the spline enables the spline to have sharp corners because the spacing between the spline elements that constitute a spline can be irregular. Rational means that irregular geometry such as arcs, circles, and ellipses can be combined with free-form curves. The Bezier-spline (B-spline) is the core that enables accurate fitting of curves to input data with Bezier's curve-fitting interface. Not only are spline curves more accurate compared to smooth polyline curves, but they also use less disk space.

The prompt sequence to draw a spline with six fit points is given below.

Command: **_SPLINE**
Current settings: Method=Fit Knots=Chord
Specify first point or [Method/Knots/Object]: *Select point P1*
Enter next point or [start Tangency/toLerance]: *Select point P2.*
Enter next point or [end Tangency/toLerance/Undo/Close]: *Select point P3.*
Enter next point or [end Tangency/toLerance/Undo/Close]: *Select point P4*
Enter next point or [end Tangency/toLerance/Undo/Close]: *Select point P5.*
Enter next point or [end Tangency/toLerance/Undo/Close]: *Select point P6 and press ENTER to end the process of point specification*

Options for Creating Splines

The options under this command for creating splines are as follows:

Object

This option allows you to change a 2D spline-fitted polyline into a NURBS spline. The original splined polyline is deleted if the system variable **DELOBJ** is set to 1, which is the default value of the variable. You can change a polyline into a splined polyline using the **Spline** option of the **Edit Polyline** tool.

Method

In AutoCAD LT, you can create a spline by specifying fit points or control vertices. By default, a spline is created by specifying the fit points. Fit points are the points through which the spline will pass. Control vertices determine the shape of the curve. To set the method to create a spline, enter **M** at the **Specify first point or [Method/Knots/Object]** prompt. Then, you need to specify the method at the **Enter spline creation method [Fit/CV]** prompt. Figure 17-20 shows the spline created by using the **Fit** method. Figure 17-21 shows the spline created by using the **CV** method.

Note

On selecting a spline, a grip will be displayed at the start point of the spline. Left-click on the grip; a shortcut menu will be displayed. Now, you can choose the appropriate option to display the fit points or the control vertices, as shown in Figure 17-22.

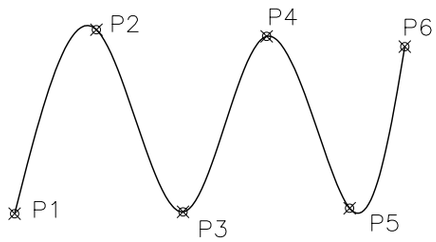

Figure 17-20 *Spline drawn by using the* ***Fit*** *method*

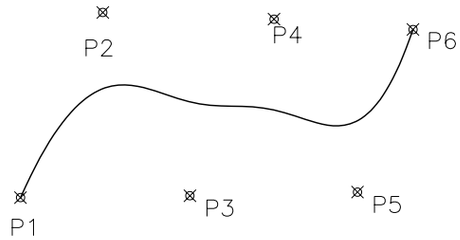

Figure 17-21 *Spline drawn by using the* ***CV*** *method*

Knots

If you have selected the **Fit** method, the **Knots** option will be displayed at the Command prompt, as given below.

Enter spline creation method [Fit/CV] <CV>: **FIT**
Current settings: Method=Fit Knots=Uniform
Specify first point or [Method/Knots/Object]:

You can specify three types of knots: Chord, Square root, and Uniform. Figure 17-23 shows the splines formed by using three different knot options.

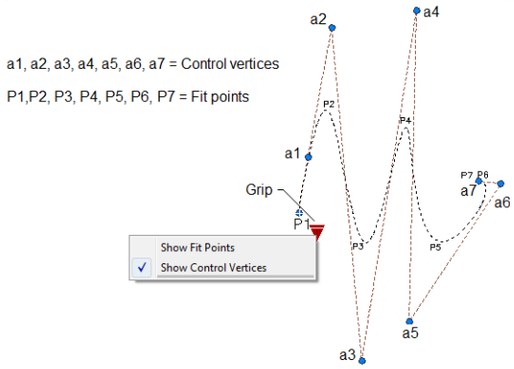

Figure 17-22 *Control vertices and fit points of a spline*

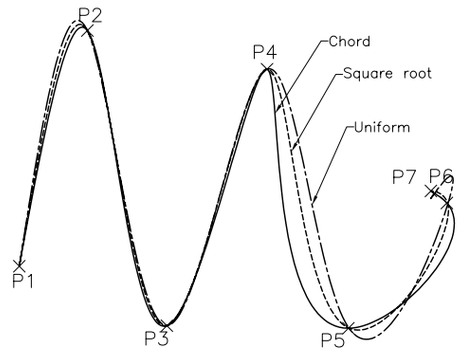

Figure 17-23 *Splines with different knot options*

Degree

If you have selected the **CV** method, then the **Specify first point or [Method/Degree/Object]** prompt will be displayed. Enter **D** at the Command prompt and specify the degree.

Close

This option allows you to create closed NURBS. When you use this option, AutoCAD LT will automatically join the endpoint of the spline with the start point, and you will be prompted to define the start tangent only.

Tolerance

This option is used to control the fit of the spline between specified points. By default, this value is zero; as a result, the spline passes through the points by which it is created. Using this option, you can specify the tolerance values that will govern the spline creation, see Figure 17-24. The

splines will be offset from the specified point by a distance equal to the tolerance value. The smaller the value of the tolerance, the closer the spline will be to the specified points.

Start and End Tangency

This option is used to control the tangency of a spline at its start point and the endpoint. On entering **T** at the **Enter next point or [start Tangency/toLerance]** or **Enter next point or [end Tangency/toLerance/Undo/Close]** prompt, you will be prompted to specify the tangent. Specify a point; the tangency will be determined by the slope of the spline at the specified point. Remember that after specifying the start point of the spline, you need to specify the start tangency. If you specify the second point, the default value will be used for the tangency. Similarly, you need to specify the end tangency after specifying the last point of the spline. Figure 17-25 shows the spline with start and end tangencies. The virtual tangent line is for reference.

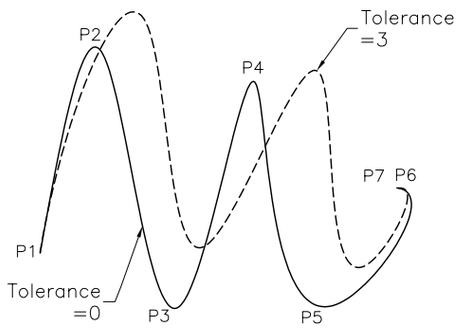

Figure 17-24 Creating a spline with the ***Tolerance*** *of 0 and 3*

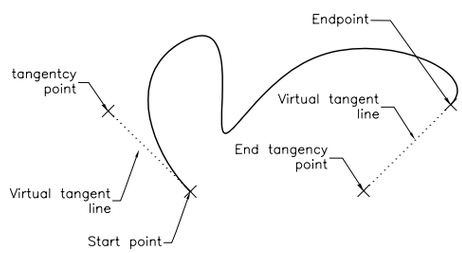

Figure 17-25 Spline with start and end tangencies

EDITING SPLINES

Ribbon: Home > Modify > Edit Spline **Menu Bar:** Modify > Object > Spline
Tool Palettes: Modify > Edit spline **Toolbar:** Modify II > Edit Spline
Command: SPLINEDIT

The NURBS can be edited using the **Edit Spline** tool. Using this tool, you can fit data in a selected spline, close or open a spline, move vertex points, and refine or reverse a spline. Apart from the ways mentioned in the preceding command box, you can use the options available in **Spline** flyout from the shortcut menu that is displayed when you select a spline and right-click. The prompt sequence that will follow when you choose the **Edit Spline** tool in the **Modify** panel is given next.

Select spline: *Select the spline to be edited if not selected already, using the above-mentioned shortcut menu.*
Enter an option [Close/Join/Fit data/Edit vertex/convert to Polyline/Reverse/Undo/eXit] <eXit>: *Select any one of the options.*

Options for Editing Splines

The options under this command for editing the splines are described next.

Fit data

When you draw a spline, the spline is fit to the specified points (data points). The **Fit data** option allows you to edit these points. You can add, delete, or move the data points. These data points or control points are also referred to as fit points. For example, if you want to redefine the start and end tangents of a spline, select the **Fit data** option, and then select the **Tangents** option. The prompt sequence that will follow when you invoke this option is given next.

Select spline: *Select the spline to be edited.*
Enter an option [Close/Join/Fit data/Edit vertex/convert to Polyline/Reverse/Undo/eXit] <eXit>: **F**
Enter a fit data option [Add/Close/Delete/Kink/Move/Purge/Tangents/ toLerance/eXit] <eXit>: **T**

The start and end tangent points can be selected or their coordinates can be entered. The options available within the **Fit data** option are as follows:

Add. You can use this option to add new fit points to the spline. When you invoke this option, you will be prompted to specify the existing fit point on the spline. After selecting the existing fit point, you will be prompted to specify the location of the new control points. The fit point you select and the next fit point appear as selected grips. You can now add a fit point between these two selected fit points, as shown in Figure 17-26. If you select the start point or endpoint of the spline, only those points are highlighted. When you select the start point of the spline, you are prompted to specify whether you want to add the new fit point before or after the start point of the spline. AutoCAD LT will continue prompting for the location of new control points until you press ENTER at the **Specify new point <exit>** prompt.

Close/Open. This option is used to close an open spline or open a closed spline, see Figure 17-27. If the spline is open, the **Close** option is available and if the spline is closed, the **Open** option is displayed.

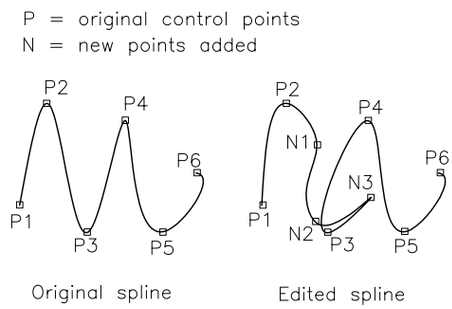

Figure 17-26 *The original spline and the edited spline after adding fit points*

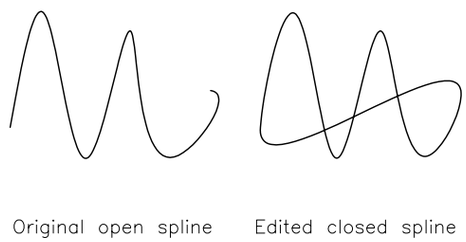

Figure 17-27 *An open spline and a closed spline*

Delete. This option is used to delete a selected fit point from a spline. You can continue deleting fit points from a spline until only two fit points are left in the spline.

Kink. This option is used to add a knot and a fit point to the selected point. On selecting this option, you will be prompted to specify a point on the spline. Select a point; a kink will be added.

Move. You can move fit points by using this option. When you select this option, the start point of the spline is highlighted and the following prompt sequence appears:

Specify new location or [Next/Previous/Select point/eXit] <N>: *Select a new location for the start point using the mouse pick button or enter any one of these options.*

You can enter **N** if you want to select the next point, **P** if you want to select a previous point, or **S** if you want to select any other point. If you enter **X** at the preceding prompt, you can exit the command. Figure 17-28 shows the movement of data points in a spline. Remember that this option is used to move only the data points on the spline and not the control points on the Bezier control frame.

Purge. This option is used to remove fit point data from a spline. This reduces the file size, which is useful when a drawing, for example, a landscape contour map, contains large number of splines. Purging simplifies the spline definition and the drawing file size.

Tangents. This option is used to modify the tangents of the start and endpoints of a selected spline, see Figure 17-29. When you select this option, you will be prompted to specify the start and end tangents for the spline. You can specify the start and end tangents or use the systems default tangents.

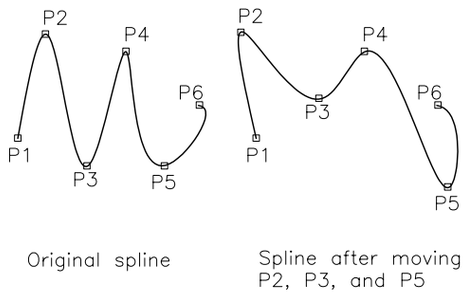

Figure 17-28 The original spline and the edited spline after moving the data points

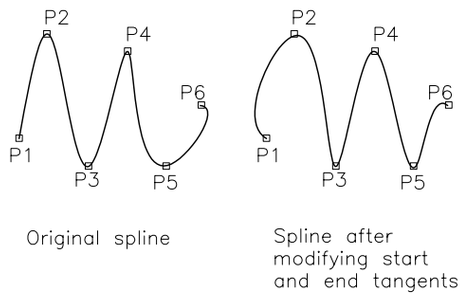

Figure 17-29 The original spline and the spline after modifying the start and end tangents

toLerance. This option is used to modify the fit tolerance values of a selected spline. As discussed while creating the splines, different tolerance values produce different splines. A smaller tolerance value creates a spline that passes very closely through the definition points of a spline. When you invoke this option, you will be prompted to specify the tolerance value for the spline.

eXit. This option is used to exit the **Fit data** option of editing splines.

Close/Open

This option is used to close an open spline or open a closed spline. When you select the **Close** option, AutoCAD LT lets you open, edit the vertex, covert spline to poyline, or reverse the spline.

Edit Vertex

This option is used to refine a spline by adding more control points in it, elevating the order, or adding weight to vertex points. The prompt sequence that will follow when you invoke this option is given next.

Enter an option [Open/Fit data/Edit vertex/convert to Polyline/Reverse/Undo/eXit] <eXit>: ***E***
Enter a vertex editing option [Add/Delete/Elevate order/Move/Weight/eXit] <eXit>:

The options in this prompt are discussed next.

Add. This option is used to add more control points on the spline. When you invoke this option, you will be prompted to specify the location of the new point on the spline. You can directly specify the location of the new point using the left mouse button. A new control point will be added at the specified location.

Delete. This option is used to delete a selected fit point from a spline.

Elevate order. This option is used to increase the order of a spline curve. An order of the curve can be defined as the highest power of the algebraic expression that defines the spline plus 1.

For example, the order of a cubic spline will be 3 + 1 = 4. Using the **Elevate order** option, you can increase this order for a selected spline. This results in more control points on the curve and a greater possibility of controlling the spline. The value of the spline order varies from 4 to 26. You can only increase the order and not decrease it. For example, if a spline order is 18, you can elevate its order to any value greater than 18, but not less than 18.

Move. When you draw a spline, it is associated with the Bezier control frame. The **Move vertex** option allows you to move the vertices of the control frame. The **Move** option is similar to the **Move** option of the **Fit data** option of editing the splines. The prompt sequence that follows when you invoke this option is given next.

Enter an option [Close/Join/Fit data/Edit vertex/convert to Polyline/Reverse/Undo/eXit] <eXit>: **E**
Enter a vertex editing option [Add/Delete/Elevate order/add Kink/Move/Weight/eXit] <eXit>: **M**
Specify new location or [Next/Previous/Select point/eXit] <N>:

Weight. You can also add weight to any of the control vertices of a spline by using this option. When weight is added to a particular vertex, the spline gets pulled more towards it. Similarly, a lower value of weight of a particular spline vertex will result in the spline getting pulled less towards that particular vertex. In other words, adding weight to a particular point will force the selected point to maintain its tangency with the point. The more weight added to the point, the more is the distance through which the spline will remain tangent to the point. By default, the spline gets pulled equally towards the vertices of the spline. The default value of weight provided to each control point is 1.0 and can have only positive values. Once you have added the weight to a point, you can proceed to the next point. You can also directly select the point to which the weight has to be added. The prompt sequence for using this option is given next.

Enter an option [Close/Join/Fit data/Edit vertex/convert to Polyline/Reverse/Undo/eXit] <eXit>: **E**
Enter a vertex editing option [Add/Delete/Elevate order/Move/Weight/eXit] <eXit>: **W**
Spline is not rational. Will make it so.
Enter new weight (current = 1.0000) or [Next/Previous/Select point/eXit] <N>: **S**
Specify existing fit point on spline <exit>: *Select a fit point*
Enter new weight (current = 1.0000) or [Next/Previous/Select point/eXit] <N>: **3**
Enter new weight (current = 1.0000) or [Next/Previous/Select point/eXit] <N>: **Exit**

Join

If a spline, line, or an arc is joined to the spline that is being edited, then you can use this option to join those entities to the spline. On choosing this option you will be prompted to select an open curve. Select the curves to be joined and press ENTER; all curves will be joined to the spline, and knot and fit point will be added at the joining point. The prompt sequence for using this option is given next.

Enter an option [Close/Join/Fit data/Edit vertex/convert to Polyline/Reverse/Undo/eXit] <eXit>: **J**
Select any open curves to join to source: *Select an object. 1 found*
Select any open curves to join to source: *Select an object. 1 found, 2 total*
Select any open curves to join to source:
2 objects joined to source

Reverse

This option is used to reverse the spline direction. This implies that when you apply this option to a spline, its start point becomes its endpoint and vice versa.

convert to Polyline

This option is used to convert a spline into a polyline. On specifying this option, you will be prompted to specify a precision value. Specify a value between 0 and 99, and then press ENTER; the spline will be converted into a polyline. The precision value determines the accuracy of the resulting polyline.

Undo

This option will undo the previous editing operation applied to a spline within the current session of the **SPLINEDIT** command. You can continue to use this option till you reach the spline as it was when you started to edit it.

Self-Evaluation Test

Answer the following questions and then compare them to those given at the end of this chapter:

1. The name of the multiline style that you enter in the **New Style Name** edit box of the **Create New Multiline style** dialog box can have up to thirty-one characters including spaces. (T/F)

2. The **Zero** option is used to create a multiline so that the zero offset position of the multiline coincides with the selected points. (T/F)

3. Multilines cannot be edited using grips. (T/F)

4. While using the **Top** justification option to draw a multiline, the line with the largest positive offset coincides with the points selected on the screen. (T/F)

5. When a multiline is cut, two separate multilines are created. (T/F)

6. The maximum number of lines that can be added to a multiline style is _____.

7. While using the **Inner arcs** option for multilines, a capping arc is drawn between the _____ numbered inner lines.

8. The **Multilines Edit tools** dialog box consists of _____ basic editing tools.

9. The _____ option of the **Fit data** option of the **Edit Spline** tool is used to reduce the file size by removing the fit data of the selected splines.

10. The _____ system variable stores the justification of the current multiline.

Review Questions

Answer the following questions:

1. By default, the *.mln* files are saved at the location *Autodesk\AutoCAD LT 2013-English\R19.0\enu\Support*. (T/F)

2. Once the **Purge** option of the **Fit data** option of the **SPLINEDIT** command is used on a spline, it becomes difficult to edit the spline and the **Fit data** option of the **SPLINEDIT** command is no longer available for the particular spline. (T/F)

3. You can break or trim a multiline. (T/F)

4. You cannot change the lineweights of the lines that constitute a multiline. (T/F)

5. You cannot weld or join separate multilines. (T/F)

6. In which file are the multiline styles saved by default?

   (a) *acadlt.mln* (b) *acadlt.pat*
   (c) *acadlt.mpr* (d) *acadlt.plt*

7. Which of the following is the default value of the start and end angles for multilines?

   (a) 90 (b) 180
   (c) 45 (d) 0

8. Which of the following commands does not work on multilines?

   (a) **MIRROR** (b) **FILLET**
   (c) **STRETCH** (d) **EXPLODE**

9. Which of the following options can be used to reverse the direction of spline creation while editing a spline?

   (a) **Fit data** (b) **Refine**
   (c) **Reverse** (d) **Weight**

10. AutoCAD LT forces a multiline to turn into a single line if the scale factor of the multiline is_____.

11. The current multiline style is saved in the _____ system variable and the default value is **STANDARD**.

12. Three justifications are available for the **MLINE** command. They are _____, _____, and _____.

13. Using the **MLEDIT** command options, you can create three types of cross intersections. They are _____, _____, and _____.

14. If value of **Fit tolerance** of a spline is _____, the spline passes exactly through the fit points of the spline.

15. You need to set the degree of a spline, if you are drawing the spline by using the _____ method.

EXERCISE 1

Create the drawing shown in Figure 17-30. Assume the missing dimensions.

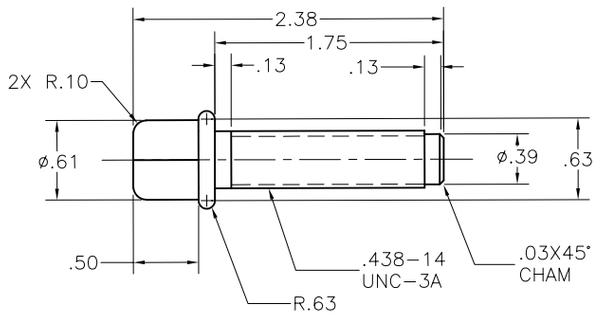

Figure 17-30 *Drawing for Exercise 1*

EXERCISE 2

Create the drawing shown in Figure 17-31. Use the **MULTILINE** command to draw the walls. The wall thickness is 12 inches. Assume the missing dimensions.

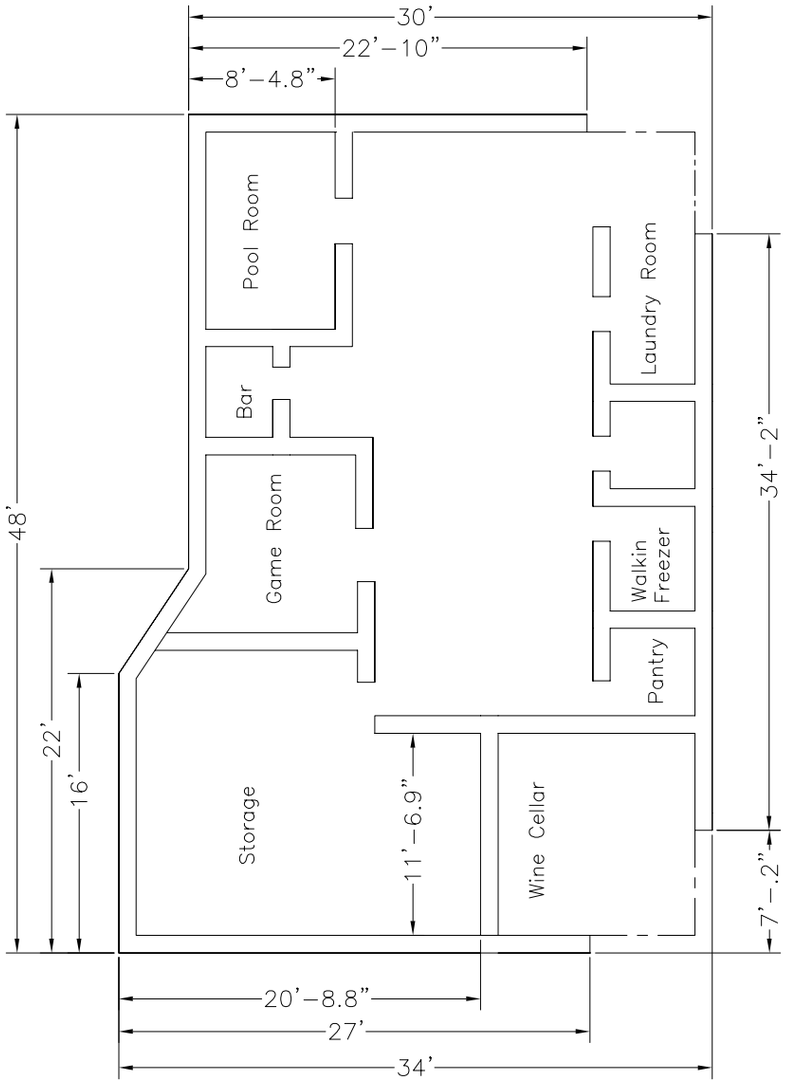

Figure 17-31 Drawing for Exercise 2

Problem-Solving Exercise 1

Create the drawing shown in Figure 17-32. Some of the reference dimensions are given in the drawing and you need to assume the missing dimensions.

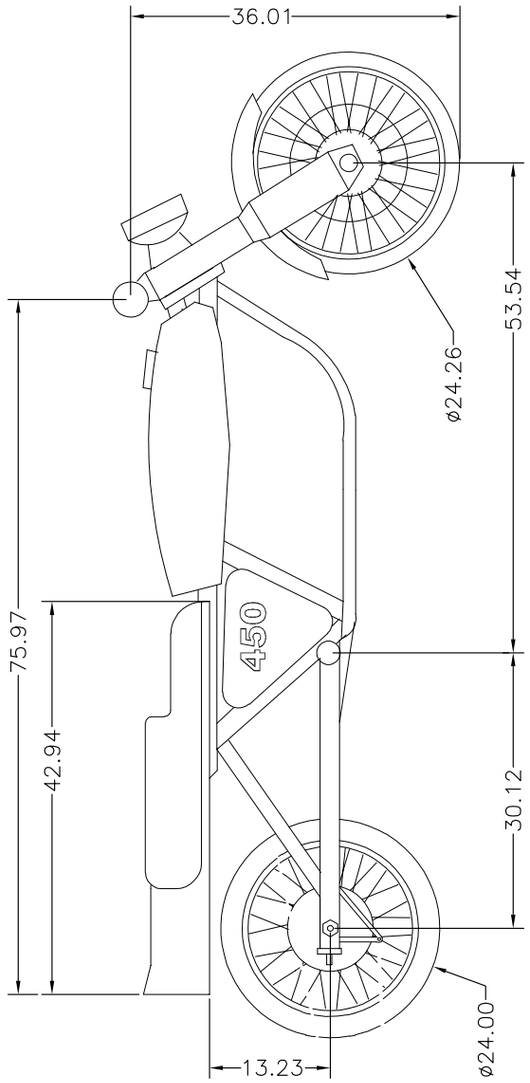

Figure 17-32 Drawing for Problem-Solving Exercise 1

Problem-Solving Exercise 2

Create the drawing shown in Figure 17-33. Some of the reference dimensions are given in the drawing and you need to assume the missing dimensions.

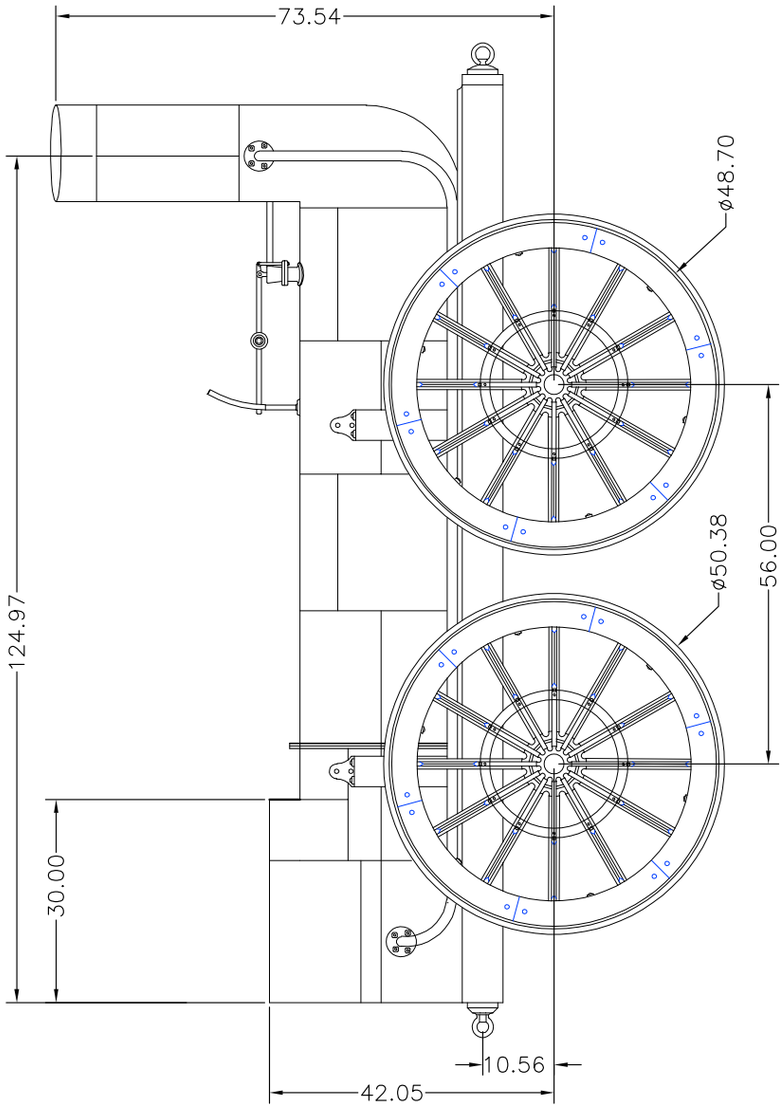

Figure 17-33 *Drawing for Problem-Solving Exercise 2*

Problem-Solving Exercise 3

Create the drawing shown in Figure 17-34. Some of the reference dimensions are given in the drawing and you need to assume the missing dimensions.

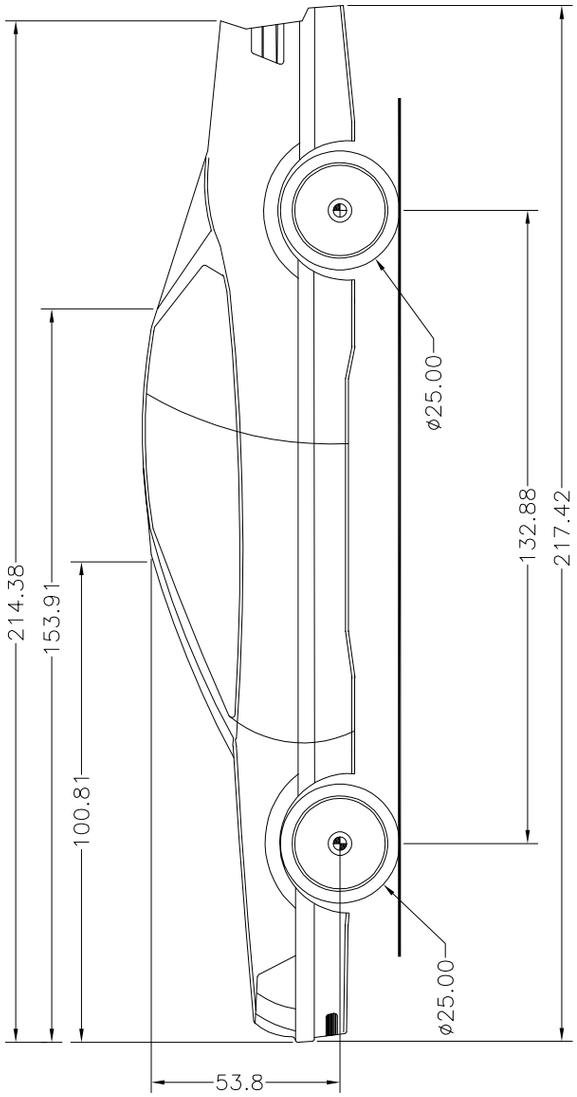

Figure 17-34 Drawing for Problem-Solving Exercise 3

Problem-Solving Exercise 4

Create the drawing shown in Figure 17-35. Some of the reference dimensions are given in the drawing and you need to assume the missing dimensions.

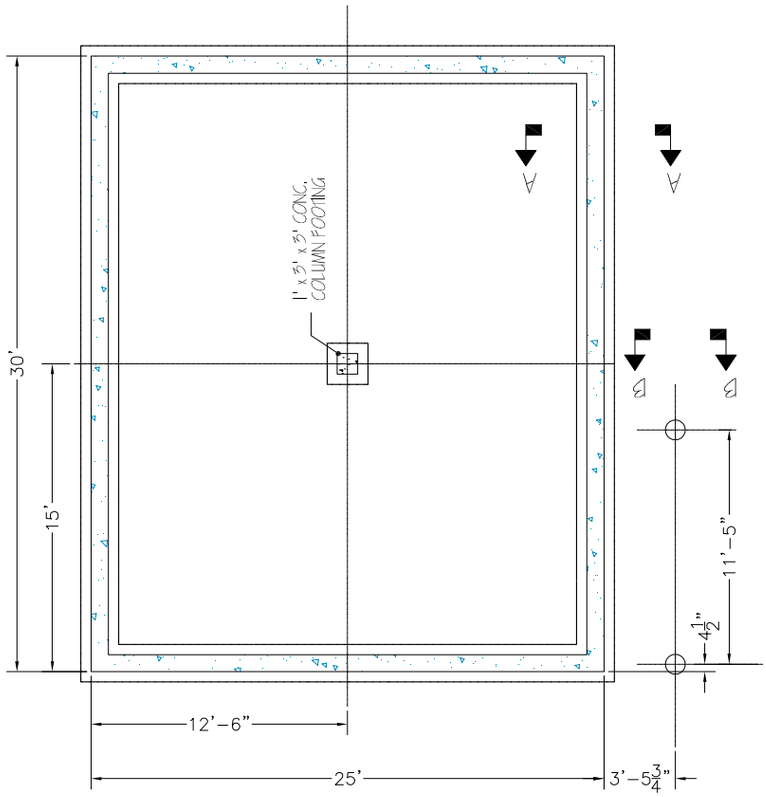

Figure 17-35 *Drawing for Problem-Solving Exercise 4*

Problem-Solving Exercise 5

Create the drawing shown in Figure 17-36. Some of the reference dimensions are given in the drawing and you need to assume the missing dimensions.

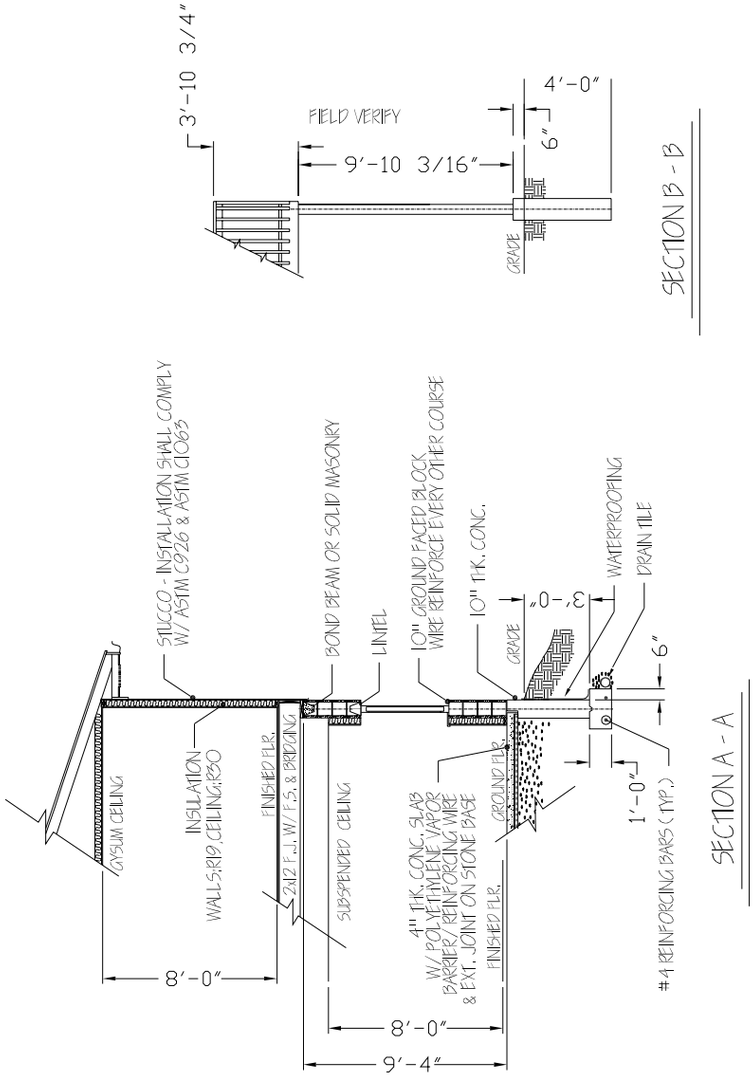

Figure 17-36 Drawing for Problem-Solving Exercise 5

Problem-Solving Exercise 6

Create the drawing shown in Figure 17-37. Some of the reference dimensions are given in the drawing and you need to assume the missing dimensions.

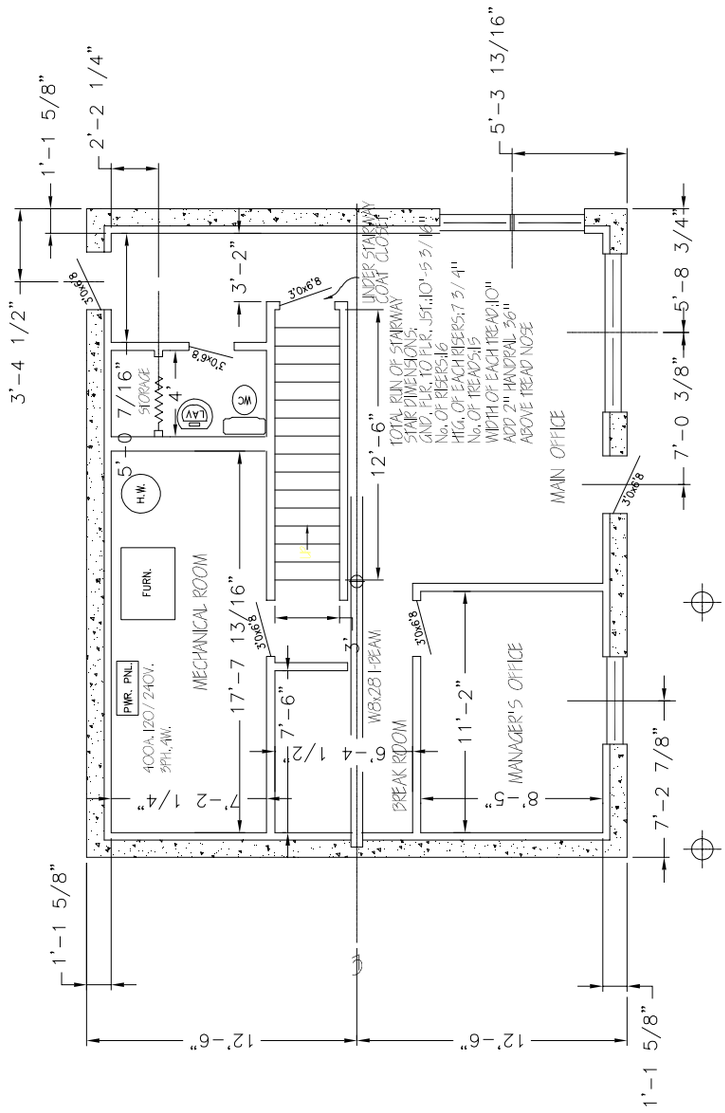

Figure 17-37 Drawing for Problem-Solving Exercise 6

Problem-Solving Exercise 7

Create the drawing shown in Figure 17-38. Some of the reference dimensions are given in the drawing and you need to assume the missing dimensions.

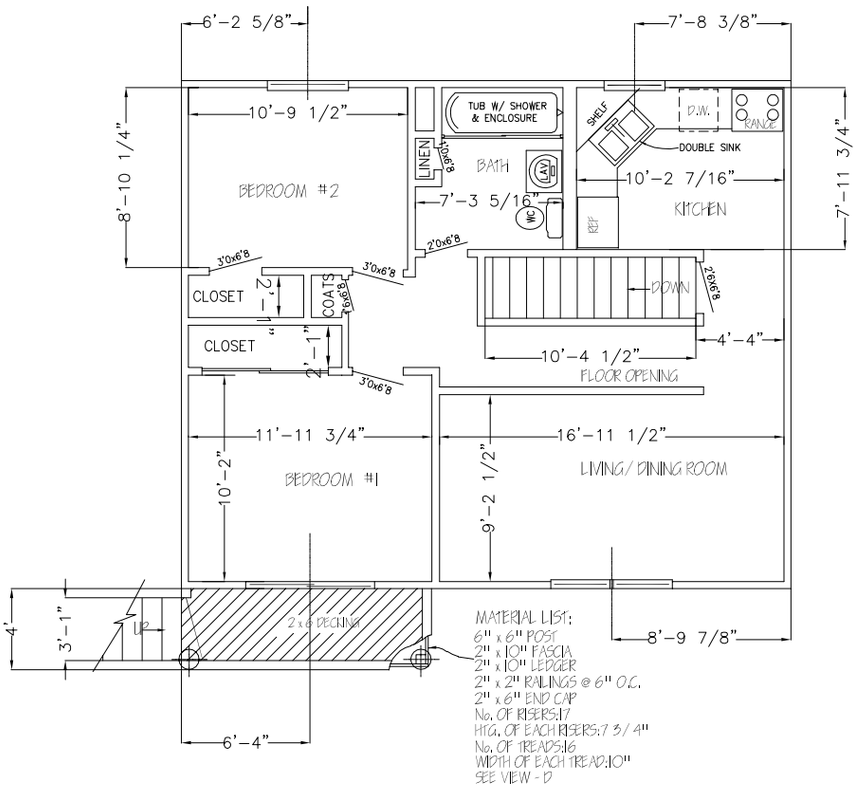

Figure 17-38 *Drawing for Problem-Solving Exercise 7*

Problem-Solving Exercise 8

Create the drawing shown in Figure 17-39. Some of the reference dimensions are given in the drawing and you need to assume the missing dimensions.

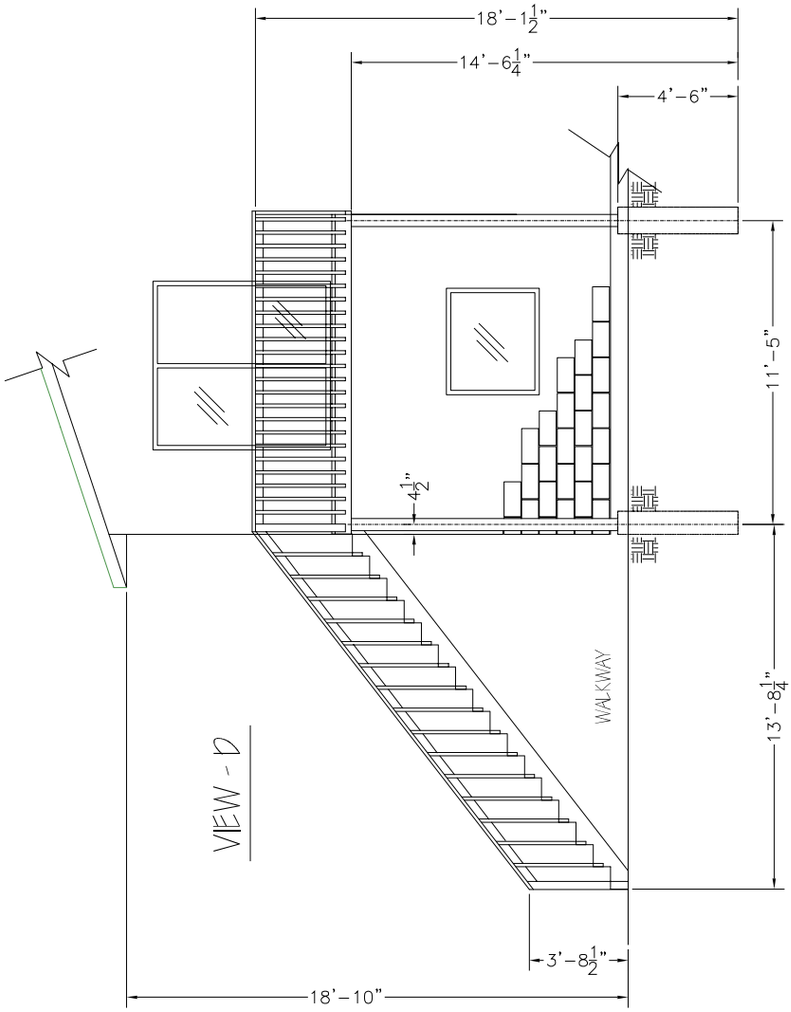

Figure 17-39 Drawing for Problem-Solving Exercise 8

Answers to Self-Evaluation Test

1. T, **2**. T, **3**. F, **4**. T, **5**. F, **6**. 16, **7**. even, **8**. five, **9**. purge, **10**. **CMLJUST**