Chapter 7

Rigging

Learning Objectives

After completing this chapter, you will be able to:

- *Understand the concept of rigging*
- *Apply constraints*

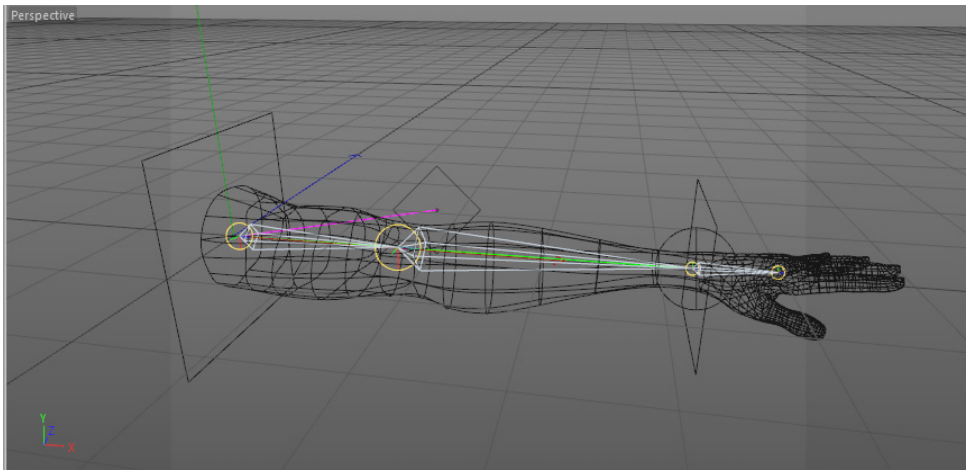

Figure 7-1 *The rig of the hand*

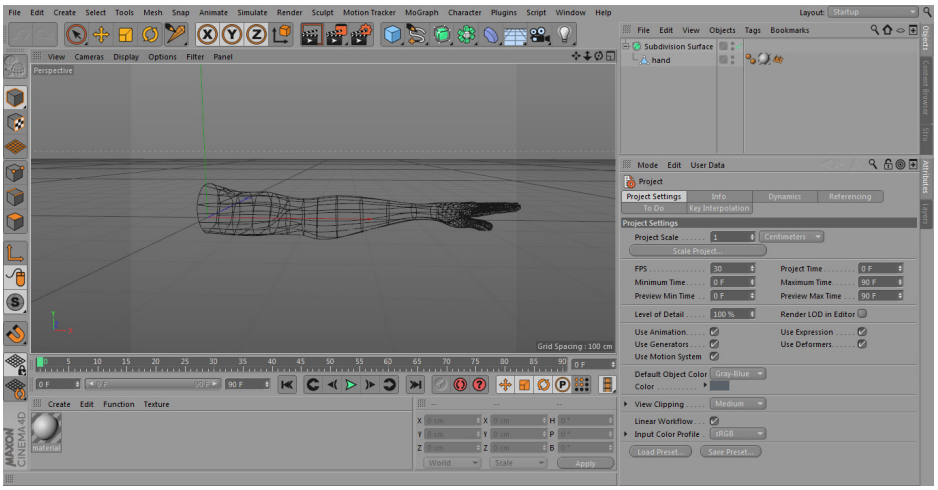

Figure 7-2 *The c07_tut1_start file*

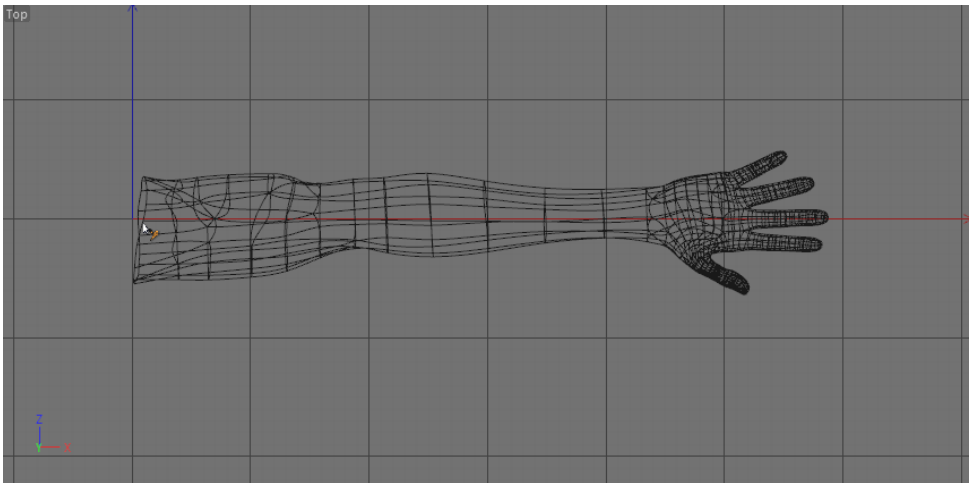

Figure 7-3 *Clicking on the shoulder joint of the hand*

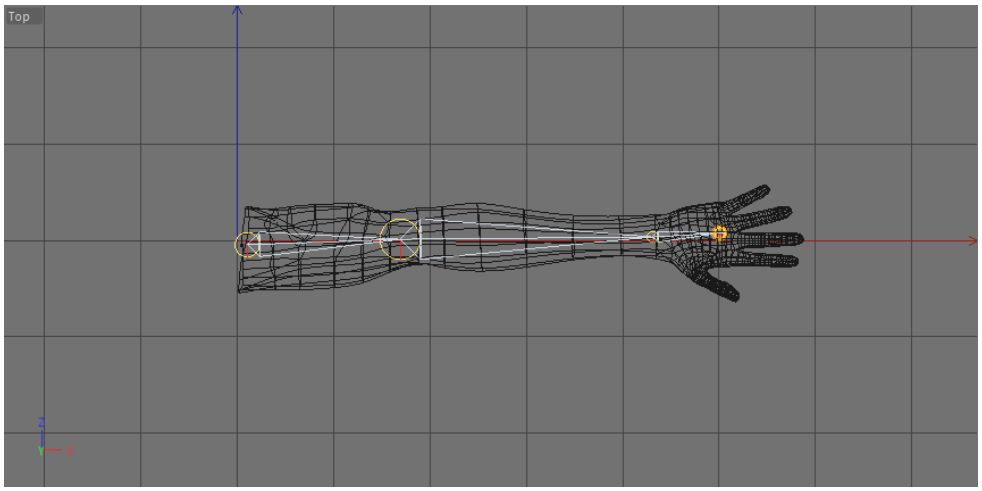

Figure 7-4 *Bone structure created*

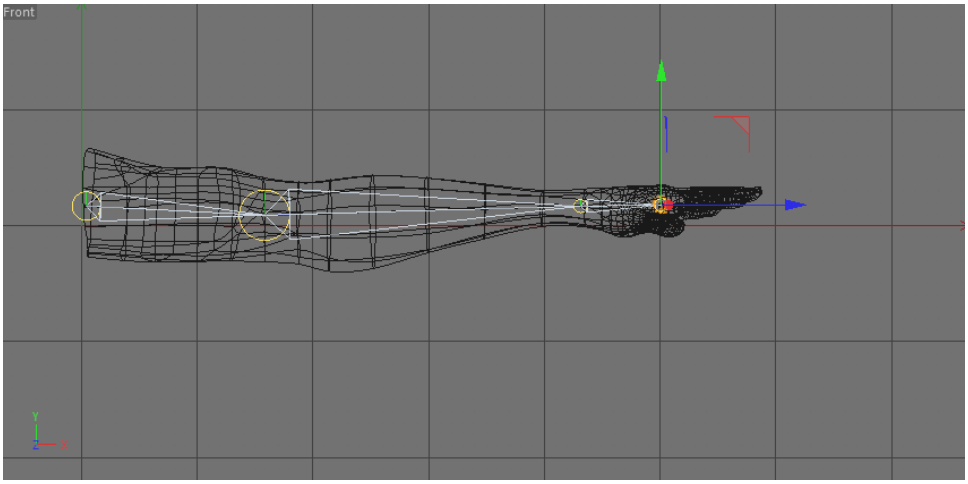

Figure 7-5 *All joints aligned in the Front viewport*

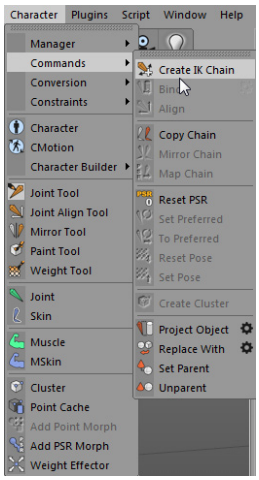

Figure 7-6 *Choosing the* ***Create IK Chain*** *from the main menu*

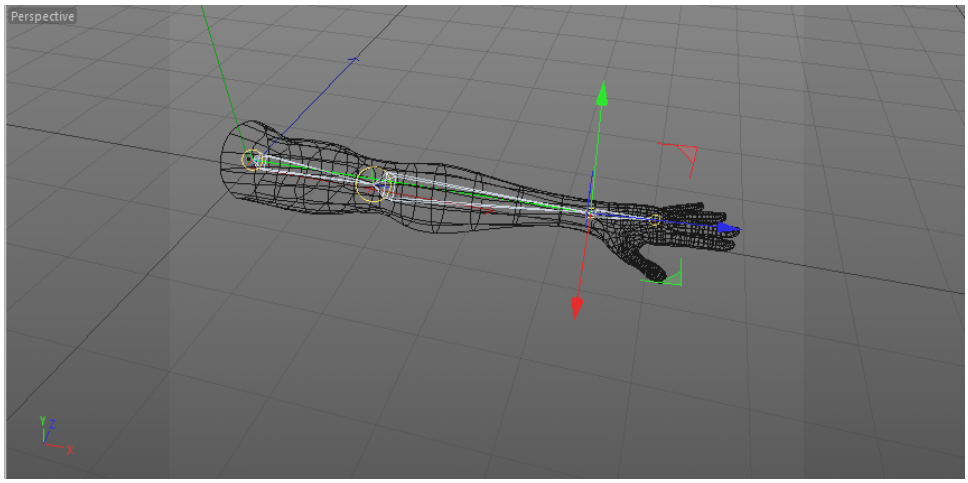

Figure 7-7 *The IK chain created in the Perspective viewport*

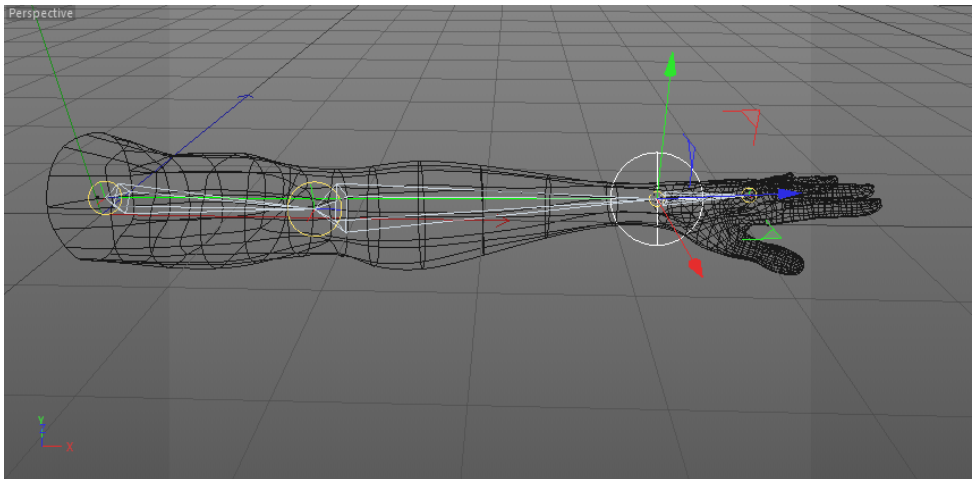

Figure 7-8 *The changed icon of wrist_joint.Goal*

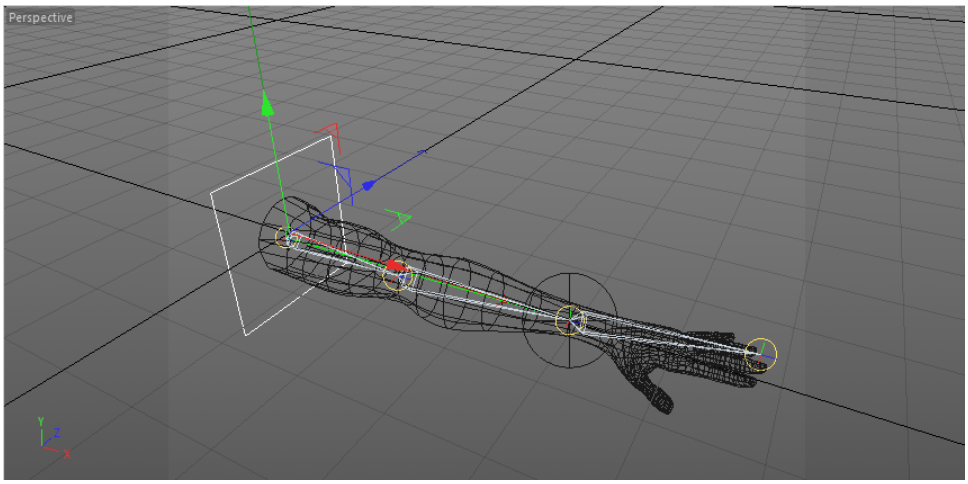

Figure 7-9 *The shoulder control in the Perspective viewport*

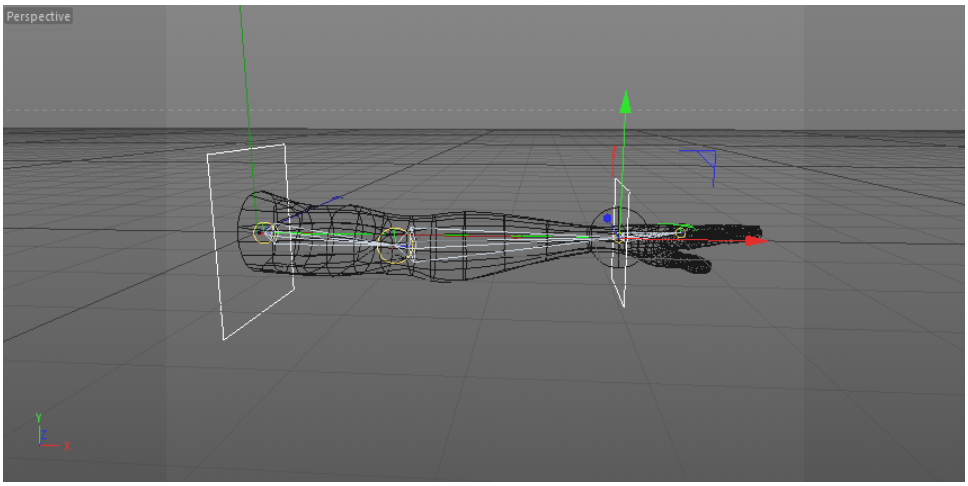

Figure 7-10 *Displaying the controllers of hand*

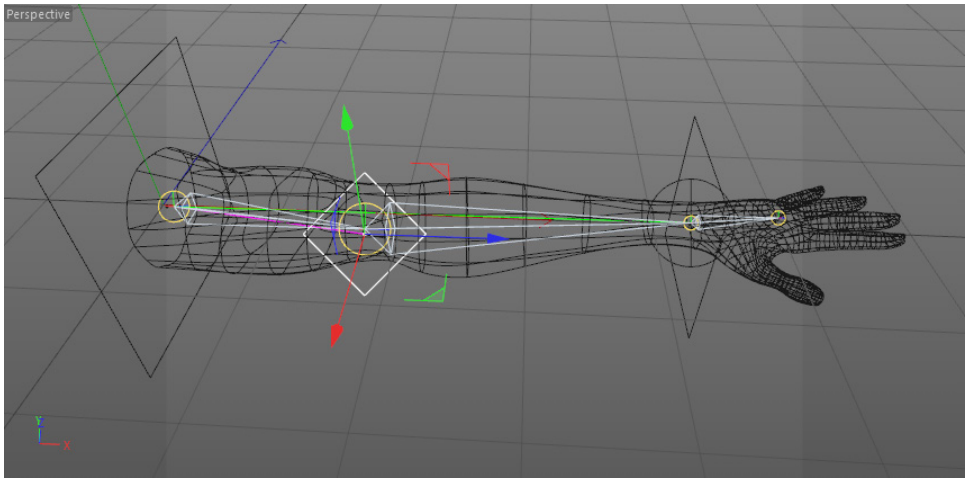

Figure 7-11 *The changed icon of shoulder_joint.Pole*

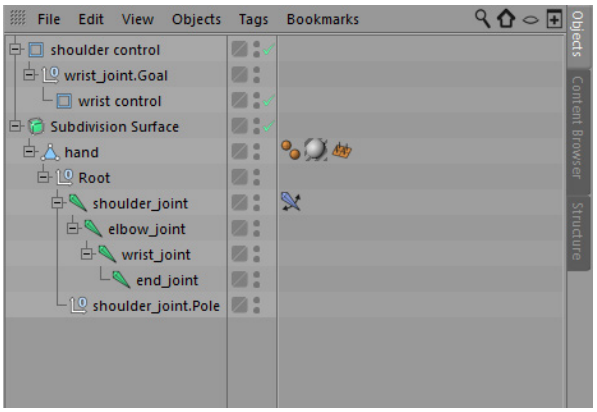

Figure 7-12 *Hierarchy for controls in the Object Manager*

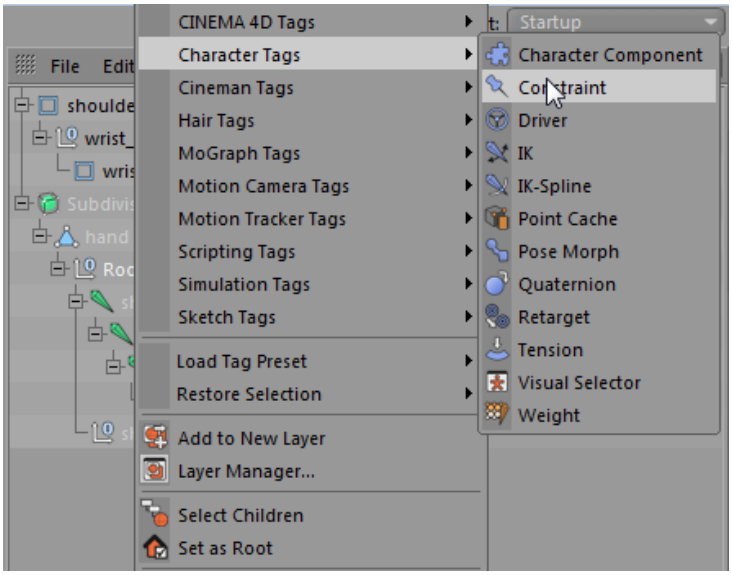

Figure 7-13 *Choosing* ***Constraint*** *from the shortcut menu*

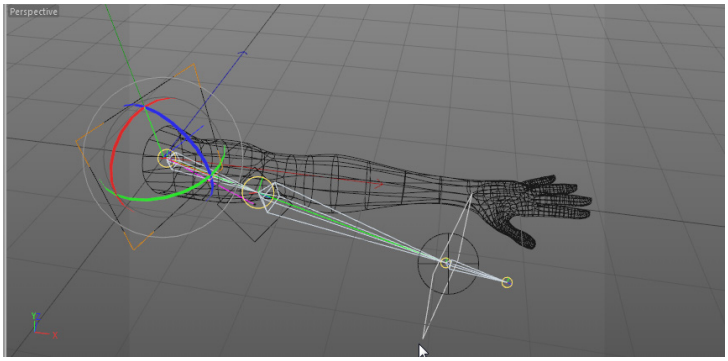

Figure 7-14 *All joints and controls rotating along with shoulder control in the Perspective viewport*

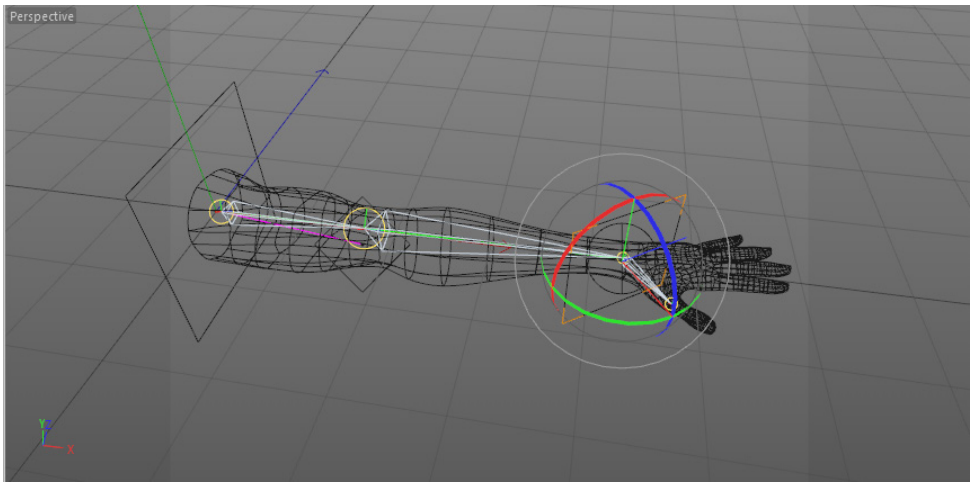

Figure 7-15 *The wrist_joint and end_joint rotating along with wrist control*

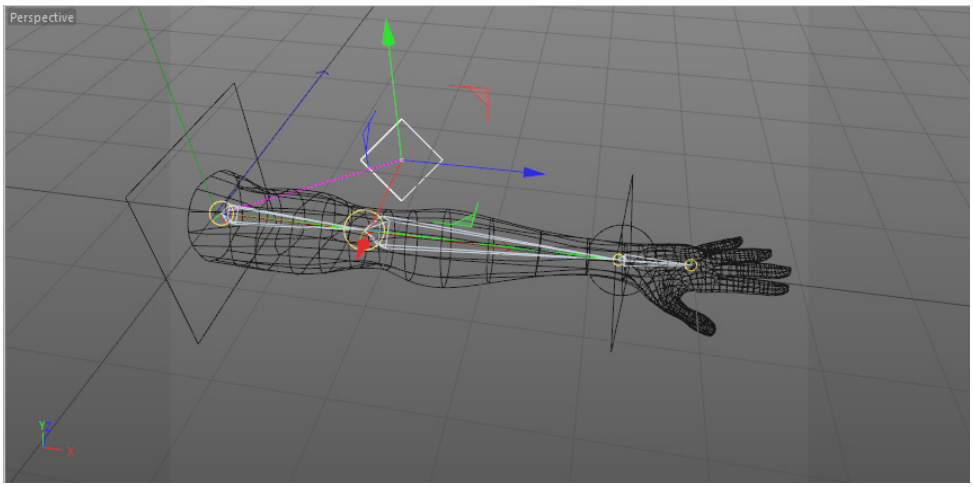

Figure 7-16 *Position of shoulder_joint.Pole changed*

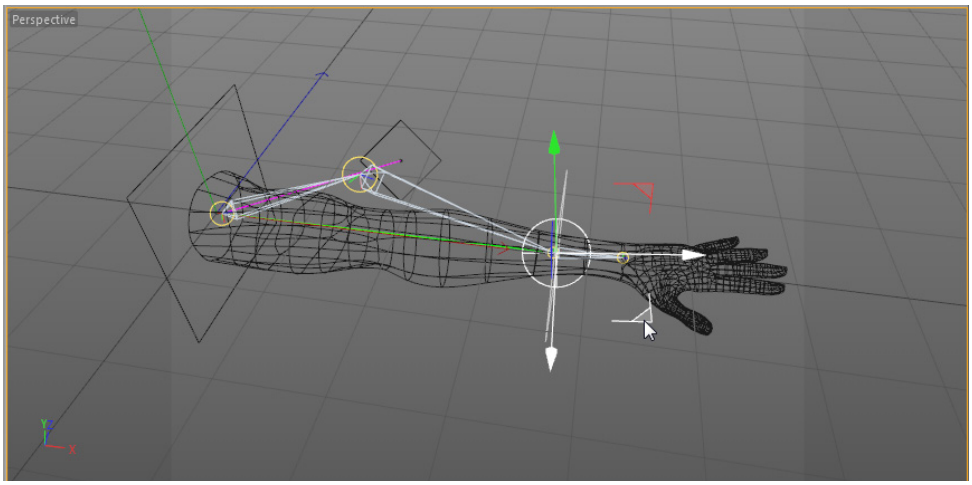

Figure 7-17 *Elbow movement controlled by wrist_joint.Goal*

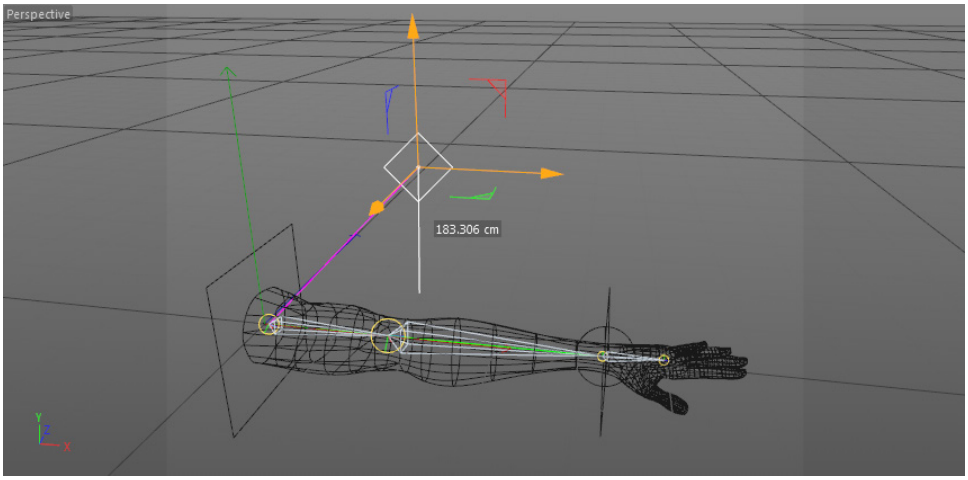

Figure 7-18 *Elbow rotation controlled by shoulder_joint.Pole*

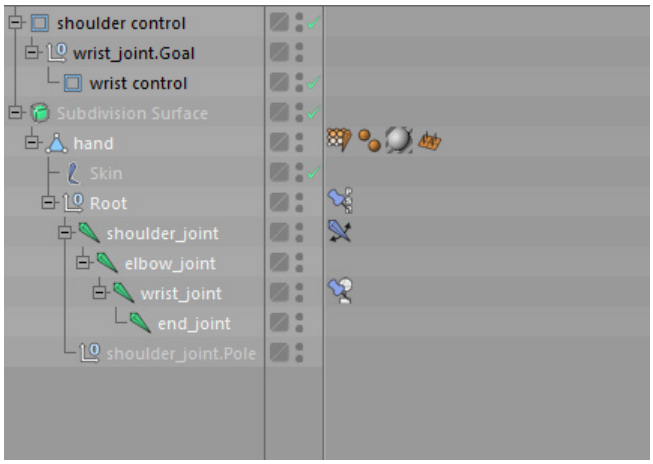

Figure 7-19 *Skin added in the Object Manager*

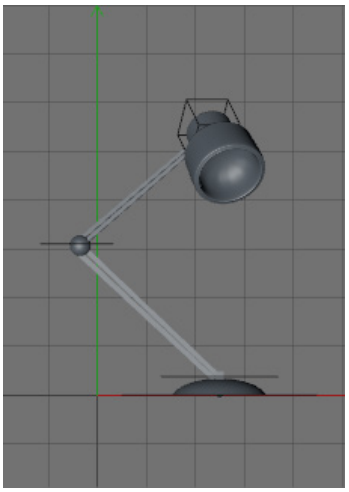

Figure 7-20 *Rig for a table lamp*

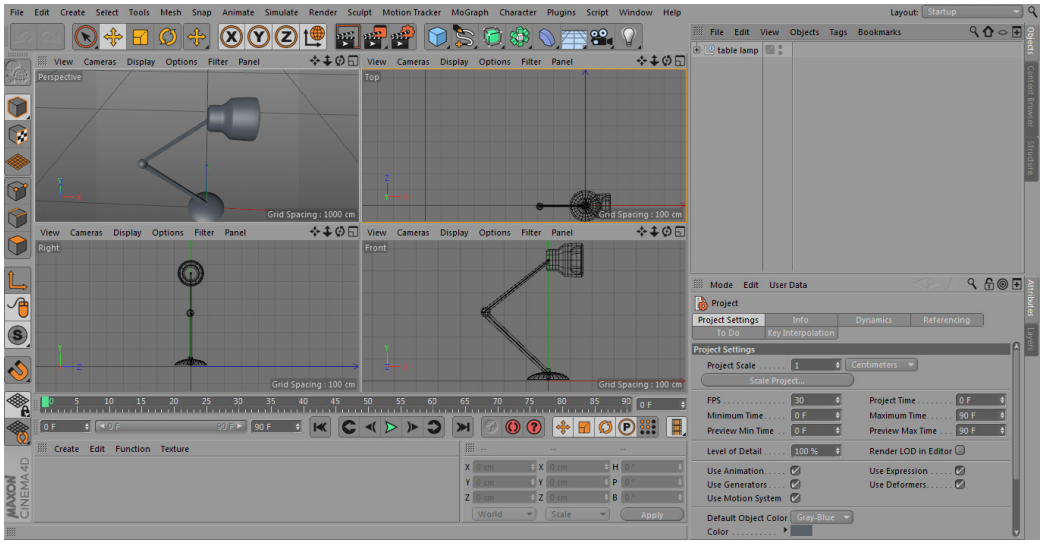

Figure 7-21 *The c07_tut2_start file*

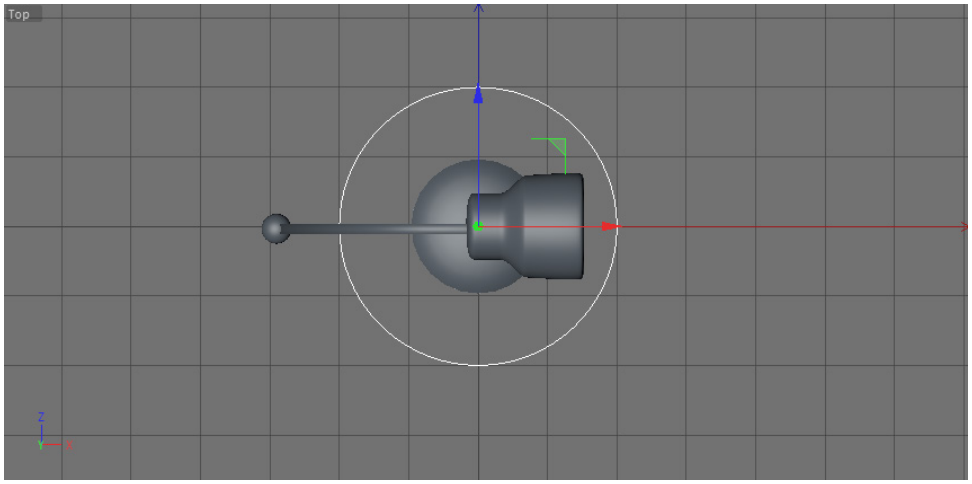

Figure 7-22 *The main control in the Top viewport*

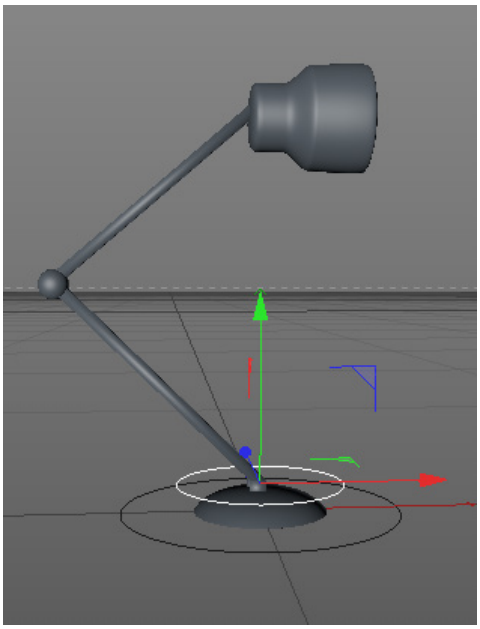

Figure 7-23 *The support control in the Perspective viewport*

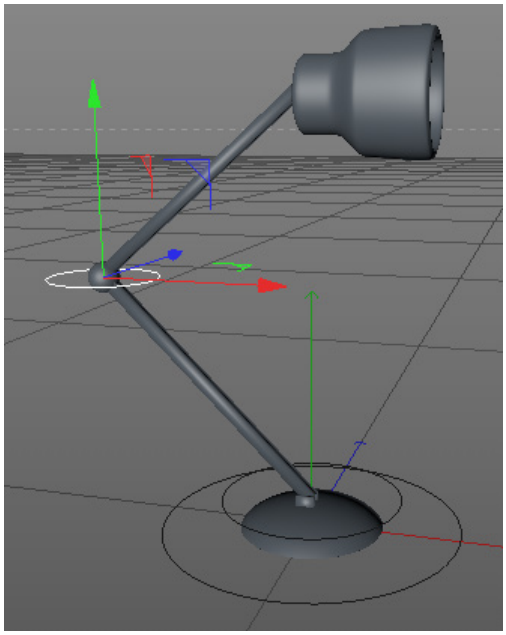

Figure 7-24 *The center control in the Perspective viewport*

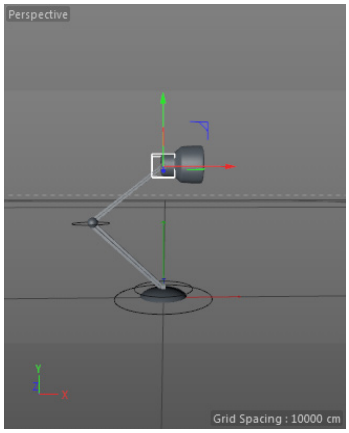

Figure 7-25 *The lamp control in the Perspective viewport*

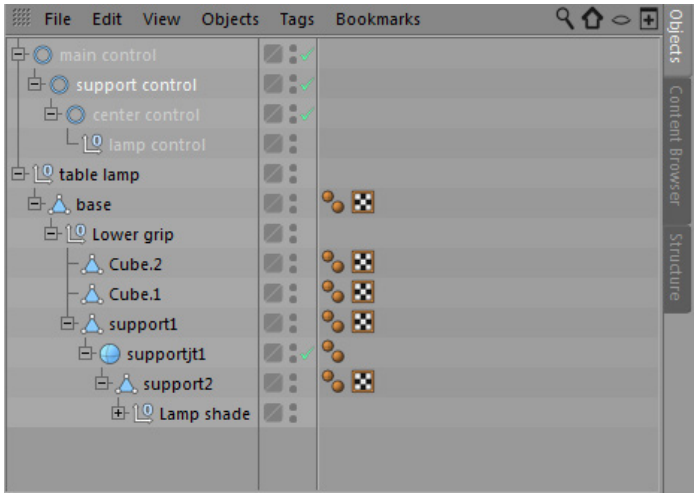

Figure 7-26 *All controls connected in the Object Manager*

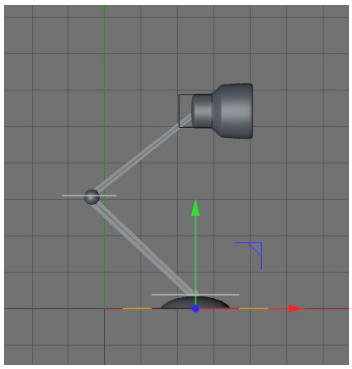

Figure 7-27 *The table lamp moving along with main control*

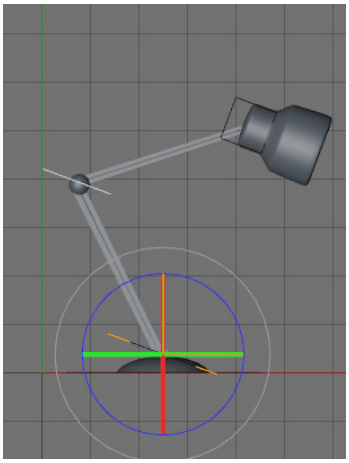

Figure 7-28 *Supports and lamp shade rotating along with support control*

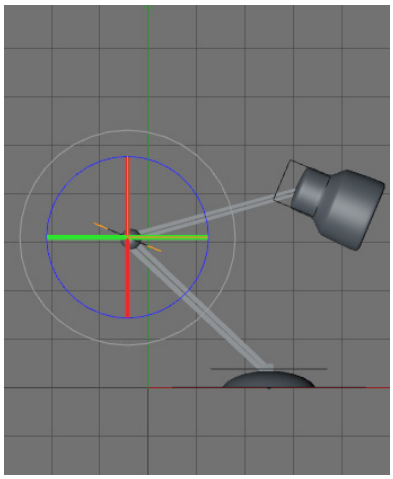

Figure 7-29 *The support2 and lamp shade rotating along with center control*

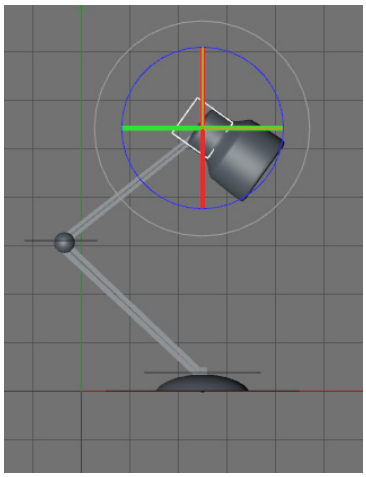

Figure 7-30 *The lamp shade rotating along with lamp control*

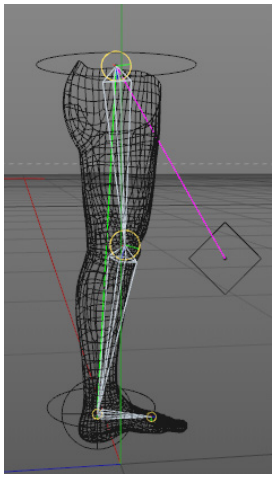

Figure 7-31 *Rig for a human leg*