To resolve this problem, Solid Edge allows you to change the order of the feature creation in the model. You can move a feature before or after another feature. However, note that the reordering is possible only between the features that are independent of each other. For example, if a part of any feature is dependent on another feature, then you cannot reorder the dependent feature above the parent feature.

In Solid Edge, the features are reordered using the **PathFinder**. Select the feature in the **PathFinder** and drag it above or below the other features. If a feature cannot be dragged above a feature in the **PathFinder**, then you cannot reorder the feature before it because the selected feature is dependent on the feature above which you want to drag it. However, if the feature is not dependent, a green arrow will be displayed on the left of the feature in the **PathFinder** while you reorder it. Figure 8-61 shows the thin wall feature being dragged above the cutout feature to reorder it before the cutout feature. If you reorder the thin wall feature before the cutout, you will get the model shown in Figure 8-60.

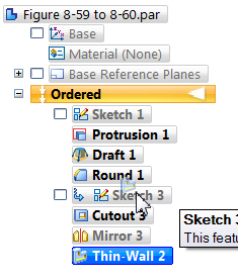

Figure 8-61 *Reordering features in the* ***PathFinder***

TUTORIALS

Tutorial 1 — Synchronous and Ordered

In this tutorial, you will create the model shown in Figure 8-62. Its dimensions are given in the drawing views shown in Figure 8-63. Save the model with the name *c08tut1.par* at the location given next:

C:\Solid Edge\c08 **(Expected time: 30 min)**

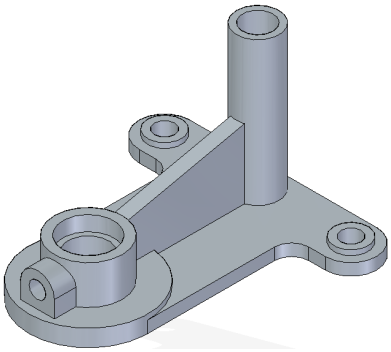

Figure 8-62 *Model for Tutorial 1*

The following steps are required to complete this tutorial:

a. Start a new part file and create the base feature on the top plane, refer to Figure 8-64.
b. Add the remaining protrusion features to the base feature, refer to Figure 8-65.
c. Add holes to the model, refer to Figure 8-66.
d. Switch to the **Ordered Part** environment and create the rib feature, refer to Figure 8-67 and Figure 8-68.
e. Save the model and close the file.

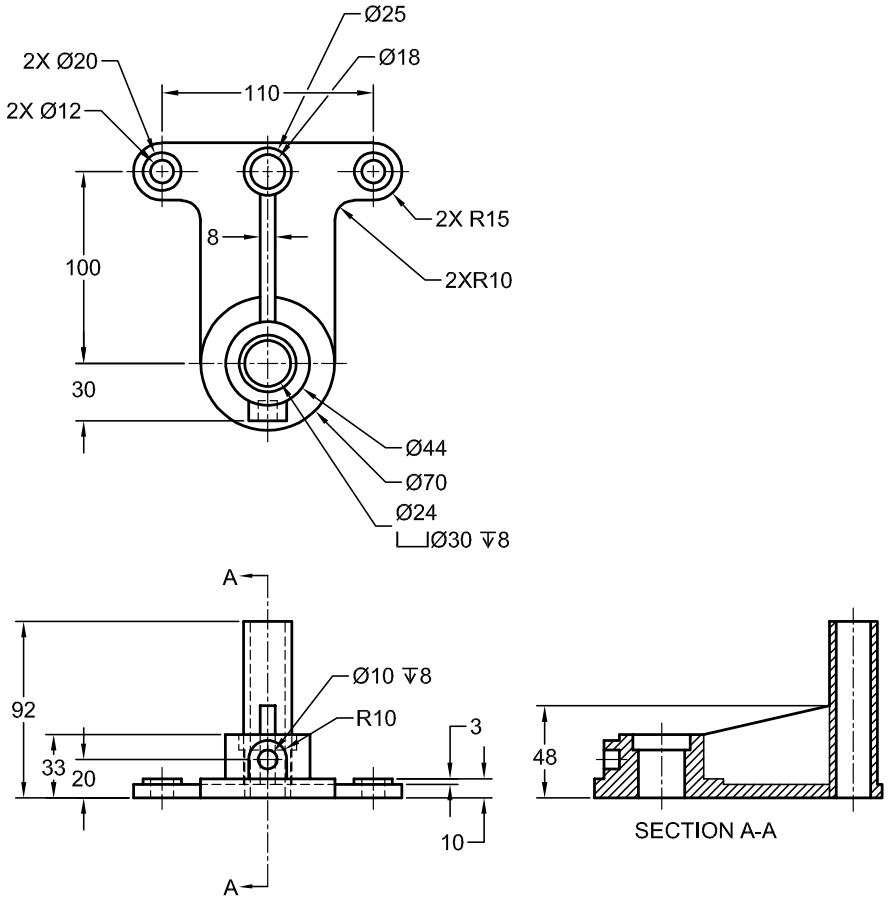

Figure 8-63 *Dimensions of the model for Tutorial 1*

Creating the Base Feature

1. Start a new part document in Solid Edge. Create the sketch of the base feature on the top (xy) plane and then extrude it. The extruded base feature is shown in Figure 8-64.

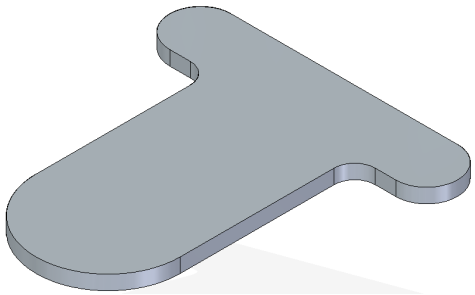

Figure 8-64 *Base feature of the model*

Adding the Remaining Extruded Features and Holes

1. Add the remaining protrusion features to the model, as shown in Figure 8-65.
2. Create holes in the model, as shown in Figure 8-66.

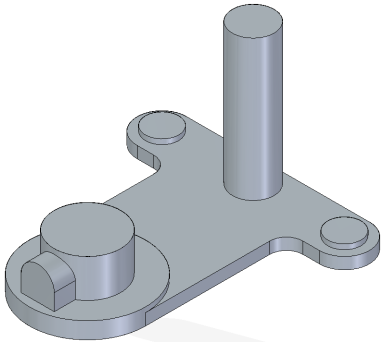

Figure 8-65 Model after adding the remaining protrusion features

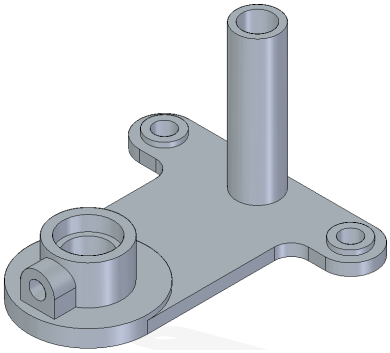

Figure 8-66 Model after adding holes

Creating the Rib Feature

Next, you need to switch to the **Ordered Part** environment and create the rib feature. The profile for this rib is a single line and needs to be extruded symmetrically on both sides of the sketching plane.

1. Choose the **Rib** tool from the **Thin Wall** drop-down in the **Solids** group of the **Home** tab; the **Sketch Step** is activated in the Command bar.

2. Select the **Coincident Plane** option from the **Create-From Options** drop-down list, if it is not already selected; you are prompted to click on a planar face or on a reference plane.

3. Select or create a reference plane passing through the center of the circular features in the middle of the model.

4. Draw a single line as the profile of the rib feature and add the required relationships and dimensions to it, as shown in Figure 8-67.

5. Exit the sketching environment; the **Direction Step** is activated and you are prompted to click to accept the displayed side or select the other side in the view.

6. Enter **8** in the **Thickness** edit box and specify the direction of the rib, as shown in Figure 8-68.

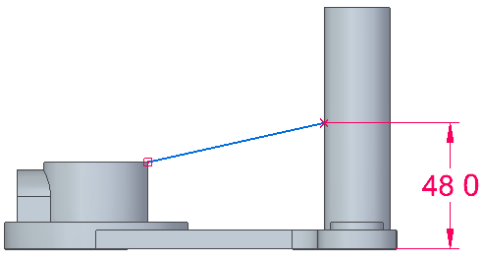

Figure 8-67 Profile for the rib feature

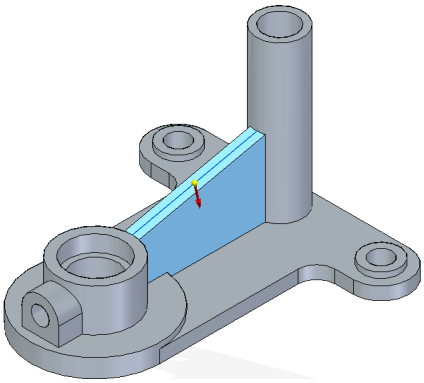

Figure 8-68 Specifying the direction of the rib

7. Choose **Finish** and then **Cancel** from the Command bar to create the rib feature. The final model after creating the rib feature is shown in Figure 8-69.

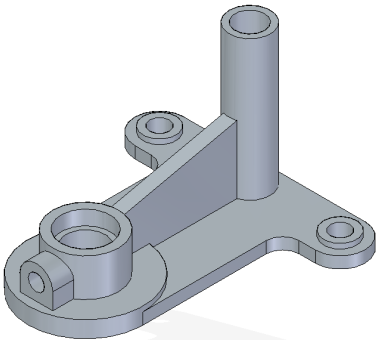

Figure 8-69 *Model after creating the rib feature*

Saving the Model

1. Save the model with the name *c08tut1.par* at the location given below and then close the file.

   C:\Solid Edge\c08

Tutorial 2 Synchronous and Ordered

In this tutorial, you will create the model of the ice tray shown in Figure 8-70. Its dimensions are given in the drawing views shown in Figure 8-71. Save the model with the name *c08tut2.par* at the location given next:

C:\Solid Edge\c08 **(Expected time: 30 min)**

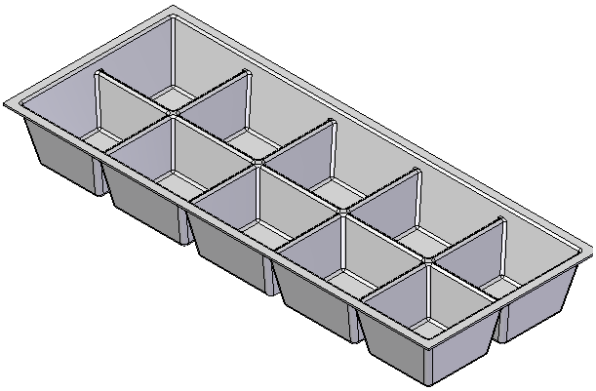

Figure 8-70 *Model for Tutorial 2*