Chapter 1

Introduction to Mold Design and NX Mold Wizard

Learning Objectives

After completing this chapter, you will be able to:

- *Understand injection molding*
- *Understand types of mold*
- *Understand different parts of injection mold*
- *Understand injection molding machine*
- *Understand types of injection molding machine*
- *Understand prerequisites to NX Mold Wizard*
- *Understand important terms in NX Mold Wizard*

INTRODUCTION

NX Mold Wizard is an application which provides tools to design plastic injection molds. In this book, You will learn the design process of Injection Mold is discussed.

NX 11.0 Mold Wizard, a product of SIEMENS Corp., provides advanced modeling tools for creating the components of mold such as cores, cavities, parting surfaces, cooling channels, sliders, lifters, and sub inserts. Due to these advanced modeling tools, it is easy to use and design the 3D associative injection mold and also the changes made in the component are automatically updated in the mold.

Mold Wizard contains a mold base library and a standard parts library which help in placing parts associatively. You can customize the standard parts library as per your requirement and can use the library to shorten the tool design and also the manufacturing cycle time. Also, you can accelerate and optimize the mold design process by using standardized processes and components. NX Mold Wizard streamlines the development of mold design process from part design to tool assembly layout, tool design, and tool validation.

Using NX Mold Wizard, you can analyse a part for its moldability and manufacturability. You can also check mold assembly for clearance and relief in various position states. To understand the mold design, you should be familiar with some basic concepts such as the injection molding machine, part defects, manufacturing processes, gate and runner types, types of ejection, and some basic calculations, which are discussed in the later chapters.

BASIC CONCEPT OF MOLD DESIGN

Injection mold is an assembly of parts containing an impression into which plastic material is injected and cooled to create a component. You can process thermoplastic as well as thermosetting polymers to create parts in injection molding machine. Injection mold enables in producing large numbers of parts of high quality very quickly with accuracy and efficiency.

To ensure the smooth workflow of the mold design process, the injection mold parts must be designed carefully. The material used for the part and the mold, the desired shape and features of the part, and the properties of the molding machine must all be taken into account before mold design.

Types of Injection Mold

The DIN IS0 standard 12165, "Components for Compression, Injection, and Compression-Injection Molds" classifies molds as follows:

1. Two Plate Mold, refer to Figure 1-1
2. Three Plate Mold, refer to Figure 1-2
3. Stripper Plate Mold, refer to Figure 1-3
4. Split-Cavity Mold, refer to Figure 1-4
5. Stack Mold, refer to Figure 1-5
6. Hot Runner Mold, refer to Figure 1-6

Evaluation Copy. Do not reproduce. For information visit www.cadcim.com

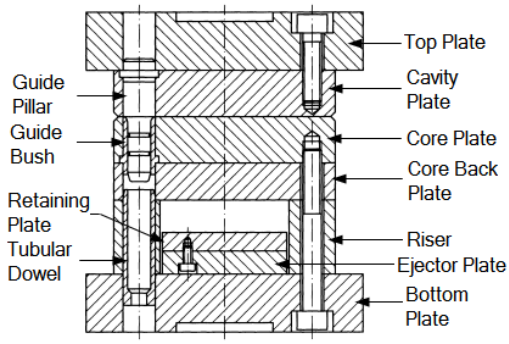

Figure 1-1 *The structure of a two plate mold*

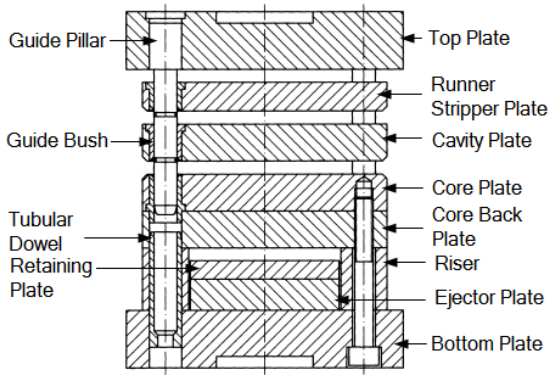

Figure 1-2 *The structure of a three plate mold*

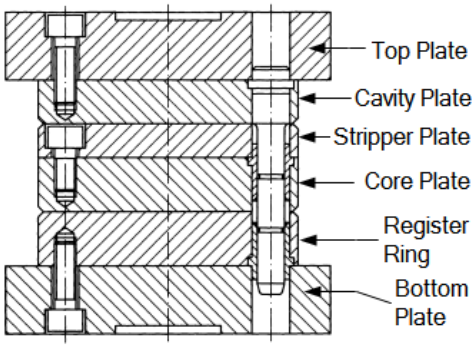

Figure 1-3 *The structure of stripper plate mold*

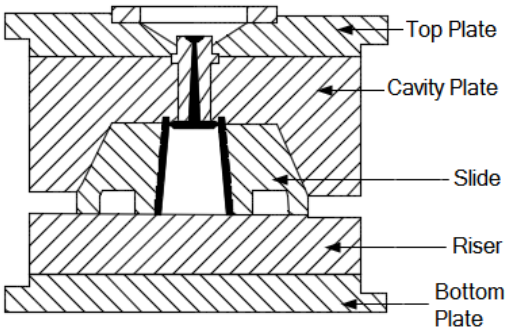

Figure 1-4 *The structure of split-cavity mold*

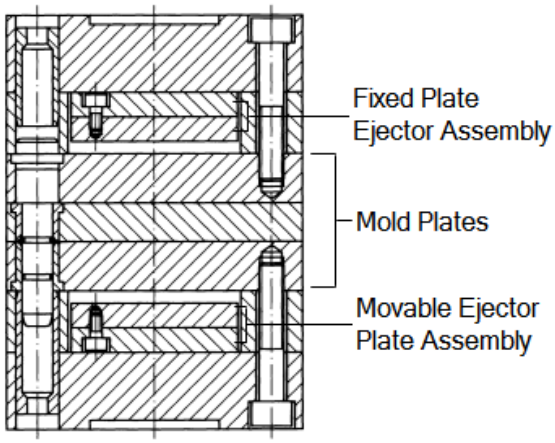

Figure 1-5 *The structure of stack mold*

Evaluation Copy. Do not reproduce. For information visit www.cadcim.com

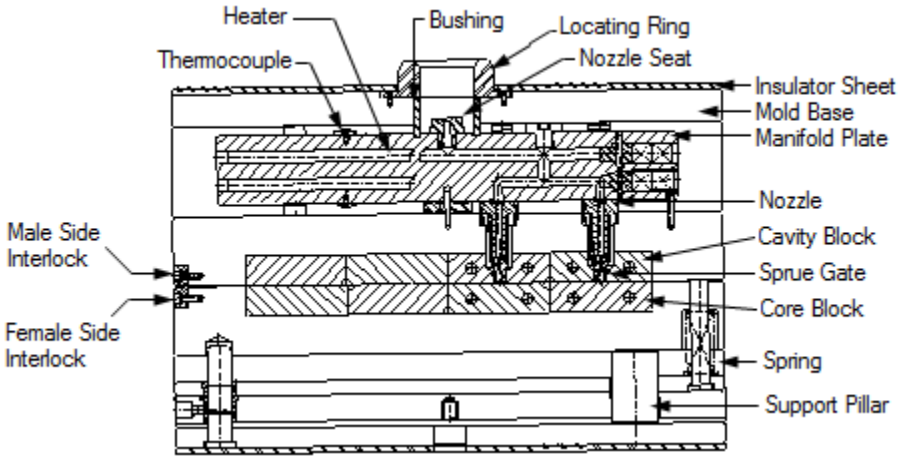

Figure 1-6 *The structure of hot runner mold*

Parts of Injection Mold

Injection mold consists of various parts, refer to Figure 1-7. Some of the parts are discussed next.

- **Register Ring**: Register ring is a circular member which is fitted into the front face of the mold plate and is used to locate the mold in correct position on the injection machine. This also ensures proper alignment between Nozzle and Sprue bush to prevent leakage of material.

- **Sprue Bush**: Sprue bush is a connecting member between machine nozzle and mold face which has a suitable aperture through which the molten material travels into the cavity.

- **Top Plate**: Top plate is used to clamp the mold with the injection molding machine on a stationary platen.

- **Bottom Plate**: Bottom plate is used to clamp the mold with the injection molding machine on a movable platen.

- **Core Plate**: It is a plate or block of steel which contains the core. The core may be machined directly from a solid plate or may be a two-part construction.

- **Cavity Plate**: It is a plate or block of steel which contains the cavity. The cavity may be machined directly from a solid plate or may be a two-part construction.

- **Ejector Plate**: It is a plate which is used for ejecting the component.

- **Ejector Retention Plate**: It is a plate which contains ejector pin for ejecting the component.

Evaluation Copy. Do not reproduce. For information visit www.cadcim.com

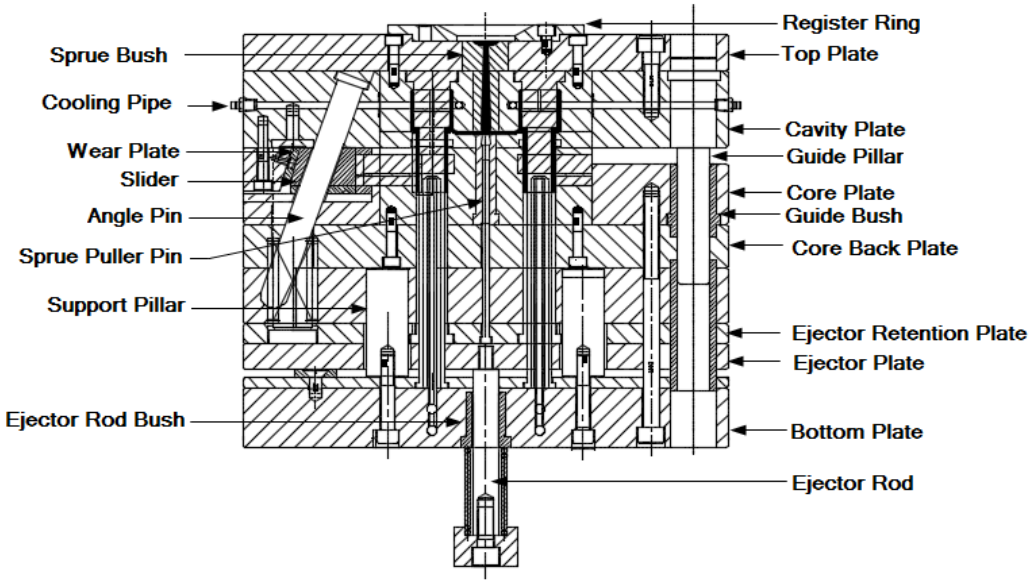

Figure 1-7 *Different parts of Injection Mold*

Injection Molding Machine

Injection molding machine is used to melt the molding plastic material inside the heating cylinder and then injecting this material into mold to create molded product by solidifying the material. Various parts of Injection molding machine are shown in Figure 1-8.

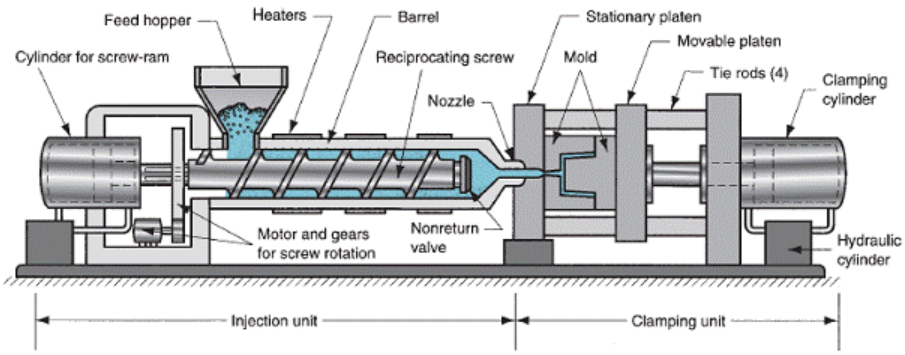

Figure 1-8 *Different parts of Injection Molding Machine*

Evaluation Copy. Do not reproduce. For information visit www.cadcim.com

Types of Injection Molding Machine

According to the orientation of the machine, the Injection molding machines are classified as follows:

(a) Horizontal Molding Machine
(b) Vertical Molding Machine
(c) Rotary Table Molding Machine
(d) Two Stage Injection Molding Machine

In this book, you will design injection molds only for Horizontal Molding Machine.

PREREQUISITES FOR USING NX MOLD WIZARD

Prior to using NX Mold Wizard for designing a mold, you should have a hands on experience on NX and must have understanding of the following concepts and processes:

- Feature Modeling
- Free Form Modeling
- Curves
- Layers
- Assemblies and Assembly Navigator
- Changing the Display and Work Part
- Adding and Creating Components
- Creating and Replacing Reference Sets
- Drafting

IMPORTANT TOOLS AND TERMS IN NX MOLD WIZARD

In this section, you will learn about some important tools and terms used in NX Mold.

Mold Coordinate System(MCSYS)

The **Mold CSYS** tool helps you to reorient the part with respect to the mold assembly. To define the mold coordinate system, you should be aware of the following points:

- Orient the product model such that the ejection direction corresponds to the Z - axis of the mold base.
- Position the product model such that the principal parting plane lies on the XY-plane of the mold base.
- Position the product model on the XY-plane of the mold base.

Shrinkage

Shrinkage is a process where the molten plastic filled inside the cavity of a mold shrinks at the time of solidification. The **Shrinkage** tool helps you to apply the scale factor on the product model. To define the scale factor, you should be aware of the following points:

- Type of Molding material
- Wall thickness of the molded part
- Cavity surface temperature

Evaluation Copy. Do not reproduce. For information visit www.cadcim.com

- Gate shape
- Presence of additive material in the molding materials

Workpiece

This tool helps you define the insert size of core and cavity. As the size of the insert increases the cost of the mold also increases because the material of the insert is costlier as compared to the cost of the plate. So, you need to be careful while deciding the size of the insert. The material generally used is P20 which has a good toughness and hardness level.

Cavity Layout

This tool and its layout type options help you to design multi-cavity mold. Its layout type can affect the mold filling time, so you need to be careful when you select the layout type.

Gate

Gate is a channel which connects the runner with the impression. The size and type of gate influence the cycle time of injection molding. The positioning of gate should be such that there is an even flow of molten material in the impression and it fills uniformly and reaches all impression extremities at the same time.

The **Gate Library** tool helps you to position the gate, change the size, and select the type of gate. The positioning settings determines the orientation of the gate. The gates are fully associative with their pockets.

The types of gates available in Mold Wizard are fan, film, pin, pin point, rectangle, step pin, tunnel, and curved tunnel, refer to Figure 1-9 (a) to (h).

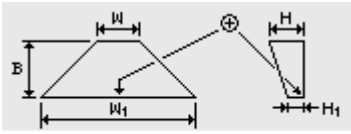

fan gate

(a)

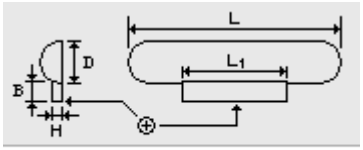

film gate

(b)

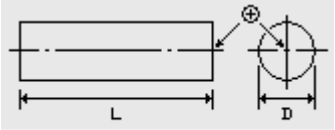

pin gate

(c)

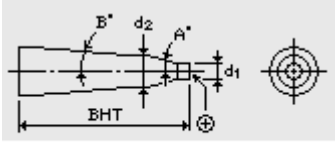

pin point

(d)

Evaluation Copy. Do not reproduce. For information visit www.cadcim.com

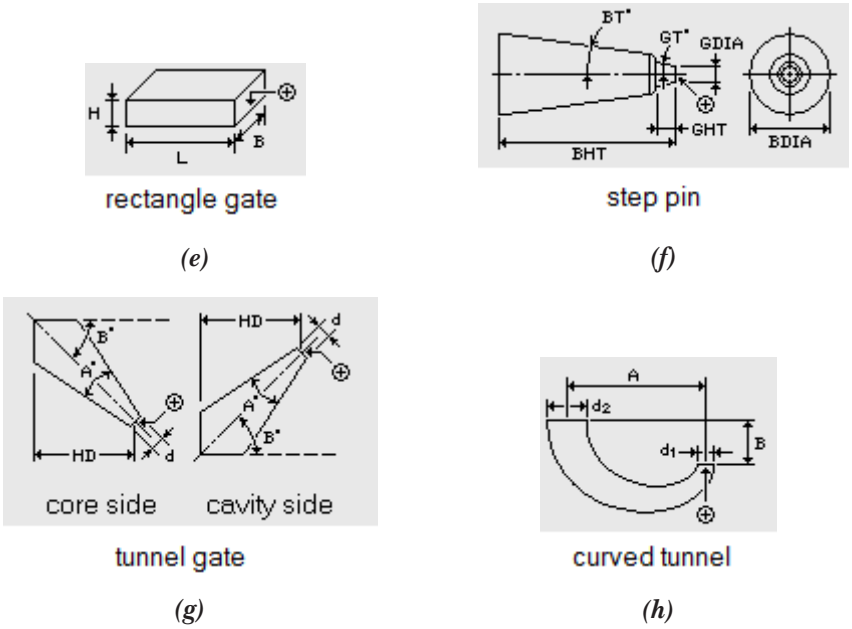

Figure 1-9 *Various types of gates*

Runner

Runner is a channel that is machined into the mold plate to connect the sprue with the gate to the impression. While designing the runner, you should keep in mind the shape of the cross- section, size of the runner, and the runner layout.

The **Runner** tool helps you define the section type, parameters of section, and the layout.

There are various types of runners available in Mold Wizard such as Circular, Parabolic, Trapezoidal, Hexagonal, and Semi Circular, as shown in Figure 1-10 (a) to (e).

Evaluation Copy. Do not reproduce. For information visit www.cadcim.com

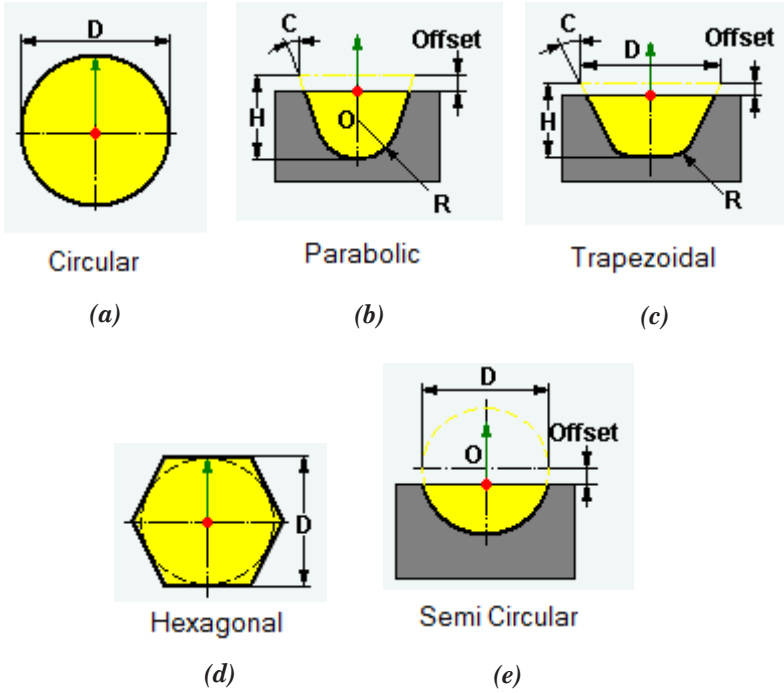

Figure 1-10 *Various types of runners*

Runner Layout

The layout of a runner system depends on the number of impressions, shape of the components, type of mold, and type of gate.

While designing the runner layout, keep length of the runner minimum to reduce pressure losses. Runner system should be balanced. Figure 1-11 shows examples of molds based on the balanced runner principle.

Evaluation Copy. Do not reproduce. For information visit www.cadcim.com

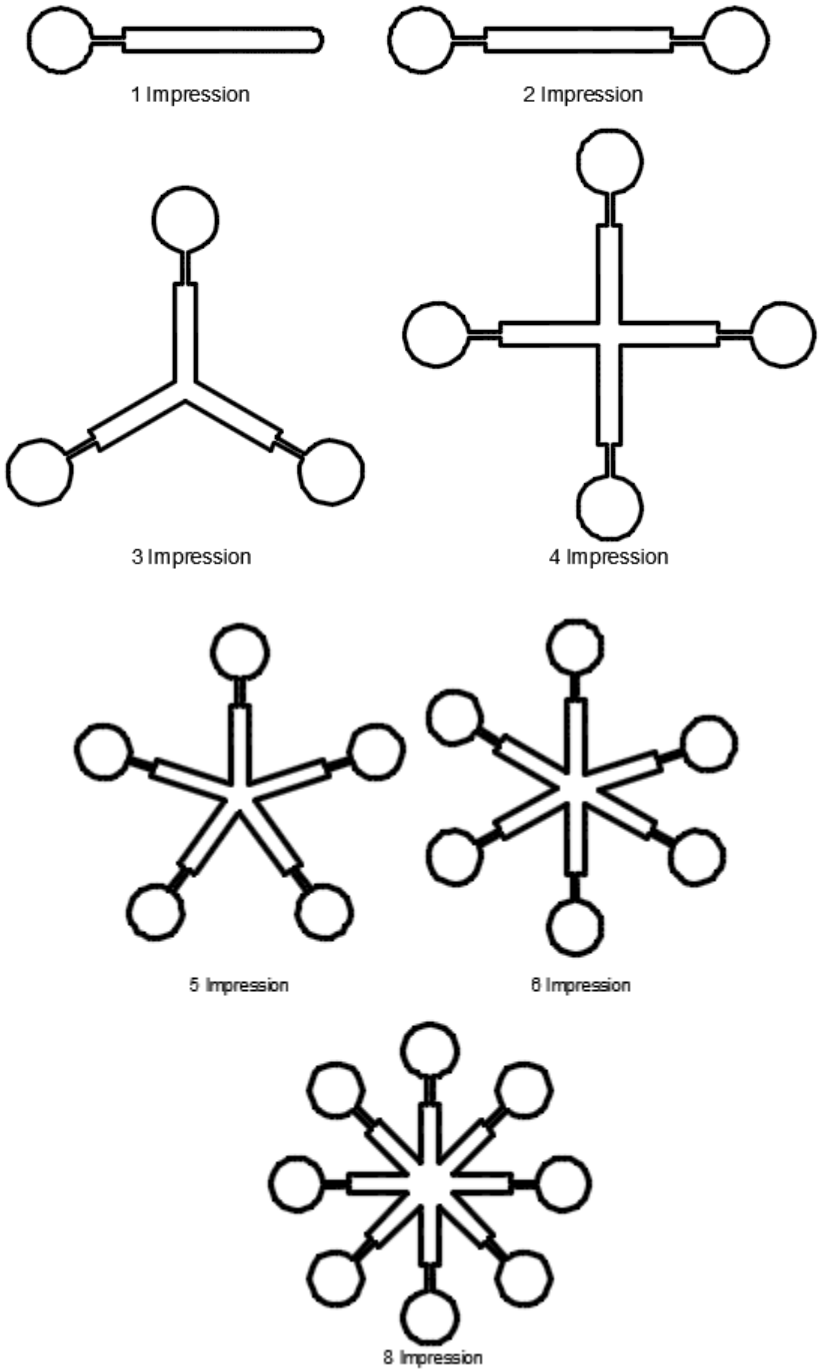

Figure 1-11 *The balanced runner layouts*

Evaluation Copy. Do not reproduce. For information visit www.cadcim.com

Cooling

Cooling is a process used for solidifying the material. The location of cooling line depends on the part geometry, cavity configuration, location of ejector pins, and moving components of the mold.

To use cooling channel for cavity cooling and core cooling, there are two different methods. Figure 1-12 shows how to layout cooling channels in cavity and Figure 1-13 shows how to layout cooling channels in core. There is one inlet and one outlet for a coolant and the arrows in the figures show the direction of coolant flow. Notice that to create a cooling channel for the core, you need to drill on plate at an angle which is quite difficult.

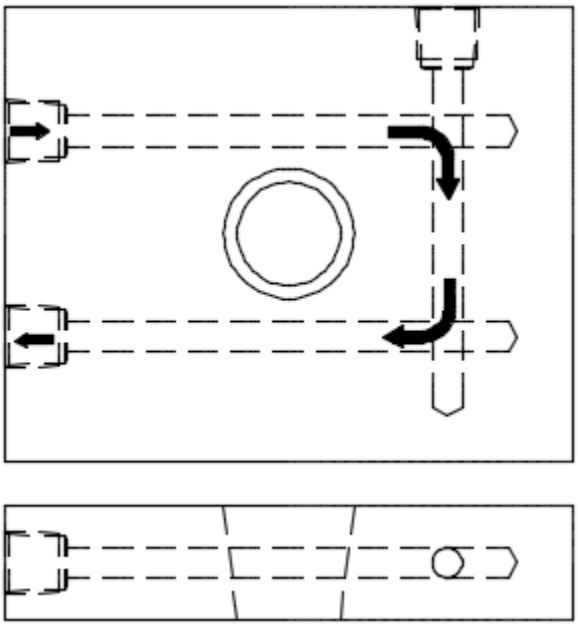

Figure 1-12 *Cooling circuit design for cavity*

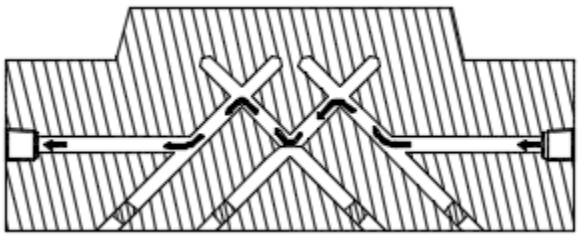

Figure 1-13 *Cooling circuit design for core*

In the Mold wizard, all the tools related to cooling are available in the **Cooling Tools** gallery. In this wizard, you will create channels, adjust channels, and add fittings to the channels.

Evaluation Copy. Do not reproduce. For information visit www.cadcim.com

Ejection

Ejection is a process that is used for removing the component from the mold. To eject a component, you need to add ejector pins.

There are various types of pins which you can select for component ejection according to the type of ejection required. But, in general, the choice depends upon the shape of the molding part. Some ejection techniques are as follows:

(i) Pin Ejection
(ii) Sleeve Ejection
(iii) Bar Ejection
(iv) Blade Ejection
(v) Air Ejection
(vi) Stripper Plate Ejection

Figure 1-14 shows various types of pin used by Misumi company in Mold Wizard.

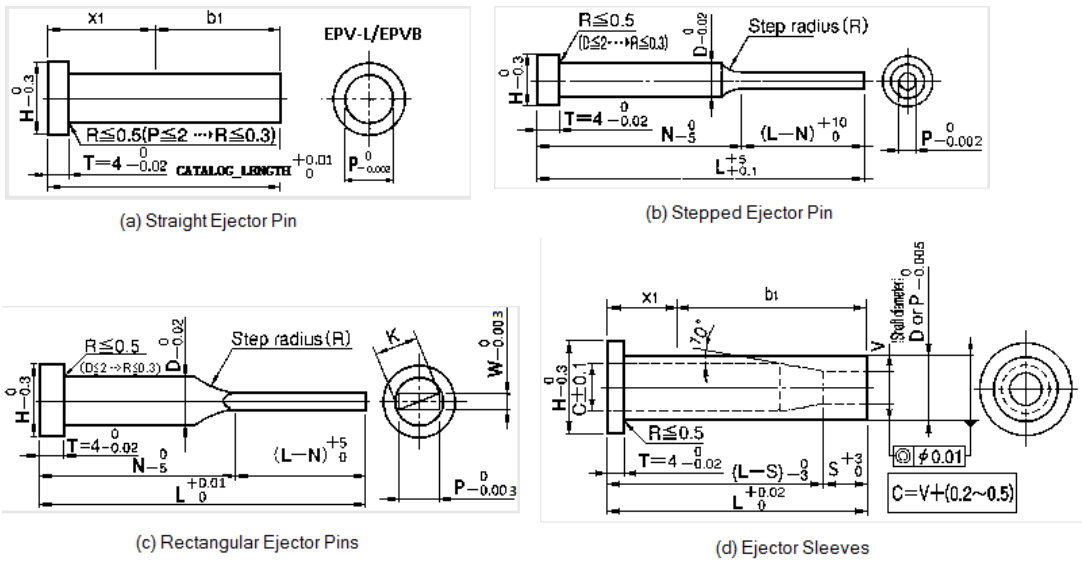

Figure 1-14 Various ejector pins used by MISUMI

Guide Pillar and Guide Bush

Guide pillar and Guide bush are used for guiding the two halves of the mold (fixed half and moving half). There is a sliding fit between guide pillar and guide bush (H7/g6).

To insert the guide pillar and guide bush in the mold, choose the Standard Part Library tool available in the Main Gallery. Figure 1-15 shows various types of guide pillar and guide bush by DME.

Evaluation Copy. Do not reproduce. For information visit www.cadcim.com

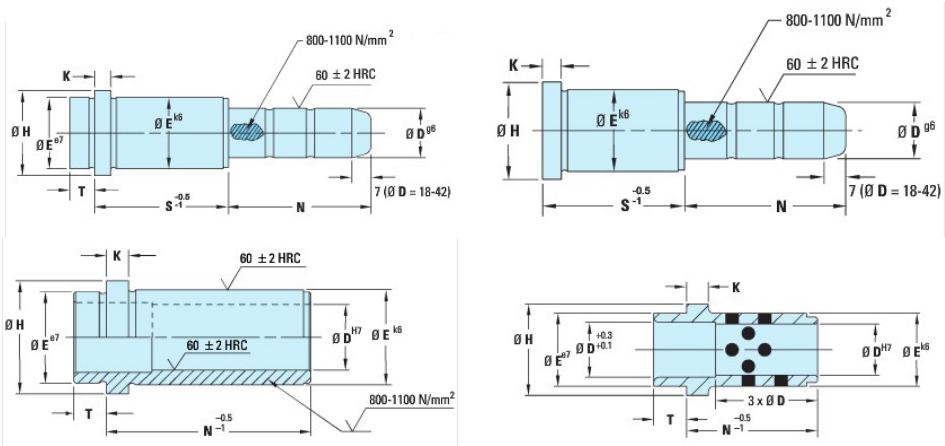

Figure 1-15 *Various guide pillar and guide bush by DME*

GETTING STARTED WITH NX MOLD WIZARD

Before starting NX Mold Wizard, you need to add NX Mold Wizard library to NX. After adding the library to NX, you can use standard parts and material library to create a mold. Start NX by double-clicking on the shortcut icon of NX on the desktop of your computer. After loading all the required files to start NX, the initial interface will be displayed, as shown in Figure 1-16.

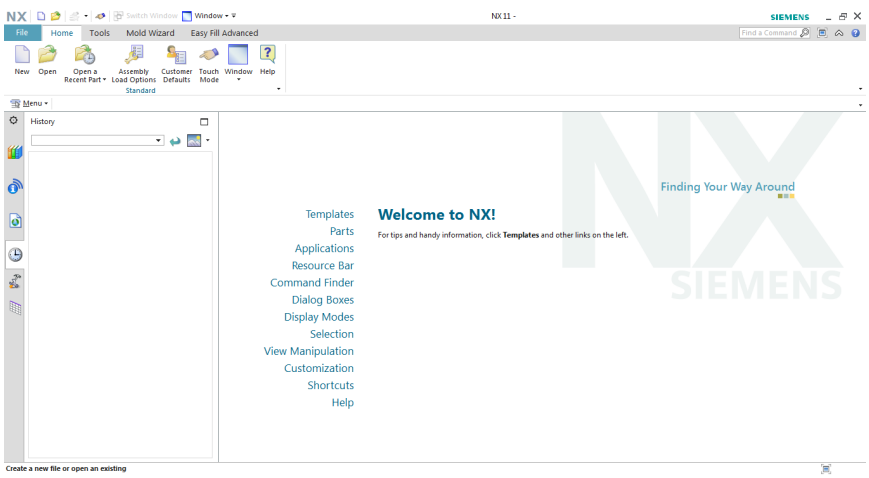

Figure 1-16 *The initial interface that appears after starting NX*

Now, choose **File > Open** from the **Ribbon**; the **Open** dialog box will be displayed, refer to Figure 1-17.

Evaluation Copy. Do not reproduce. For information visit www.cadcim.com

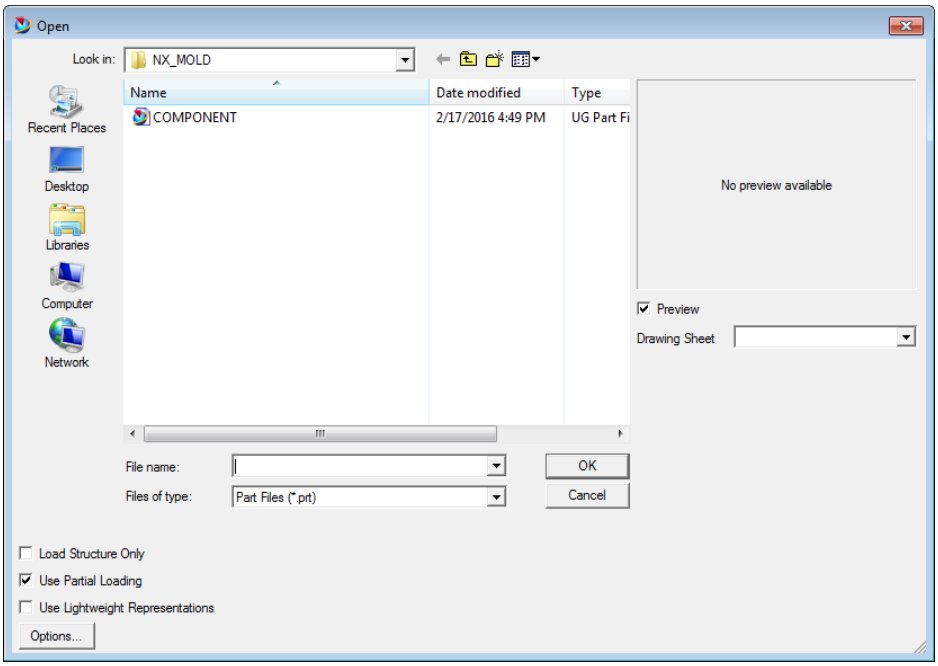

Figure 1-17 *The* ***Open*** *dialog box*

Next, select the file that need to be opened and choose the **OK** button; the file will be opened in the modeling environment, refer to Figure 1-18.

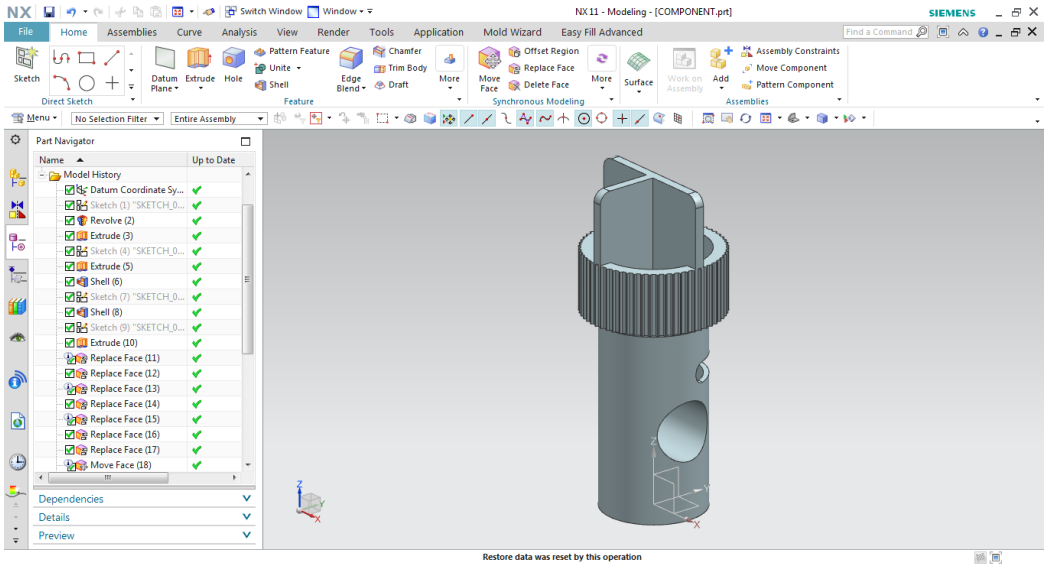

Figure 1-18 *A component displayed in the modeling environment*

Evaluation Copy. Do not reproduce. For information visit www.cadcim.com

To go to the NX Mold Wizard, choose the **Application** tab and then choose the **Mold** tool from the **Process Specific** group; the NX Mold Wizard environment will be displayed, refer to Figure 1-19.

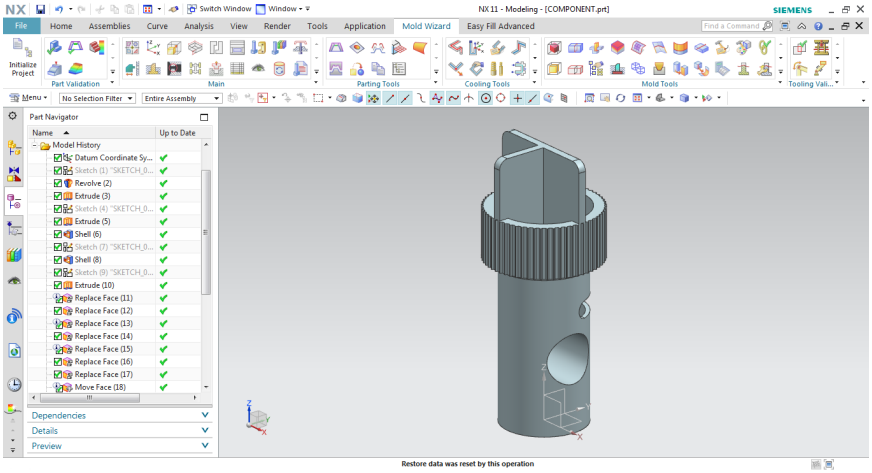

Figure 1-19 *A component displayed in the Mold wizard environment*

MOLD WIZARD TAB

In NX Mold Wizard, most of the tools are arranged in a sequential manner according to the flow of process. NX Mold offers a user-friendly design interface by providing the galleries and groups. In galleries and groups, various tools and options are grouped together based on their functionality. Various options in the Mold Wizard tab are discussed next.

The Mold Wizard Environment can be invoked from Modeling environment. To do so, choose **Application > Process Specific > Mold** from the **Ribbon**.

Initialize Project

This tool is used to create a new mold project. With the help of this tool, you can specify the type of template assembly, units, path to project part file, project name, material, and shrinkage factor.

Part Validation Gallery

This gallery comprises of validation tools which are used to check the quality of the molded parts. The tools used in this gallery are **Mold Design Validation**, **Check Regions**, **Check Wall Thickness**, **Run Flow Analysis**, and **Display Flow Analysis Results**, refer to Figure 1-20.

Evaluation Copy. Do not reproduce. For information visit www.cadcim.com

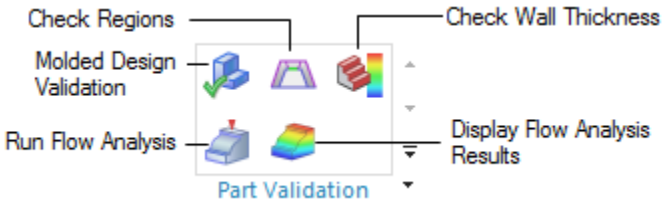

*Figure 1-20 The **Part Validation** gallery*

Main Gallery

This gallery comprises of tools which are used to make gate, runners, sliders, lifters, mold plates, and so on. The tools available in this gallery are **Family Mold**, **Mold CSYS**, **Shrinkage**, **Workpiece**, **Cavity Layout**, **Mold Base Library**, **Standard Part Library**, **Design Ejector Pin**, **Ejector Pin Post Processing**, **Slide and Lifter Library**, **Sub-insert Library**, **Design Fill**, **Runner**, **Pocket**, **Bill of Material**, and so on, refer to Figure 1-21.

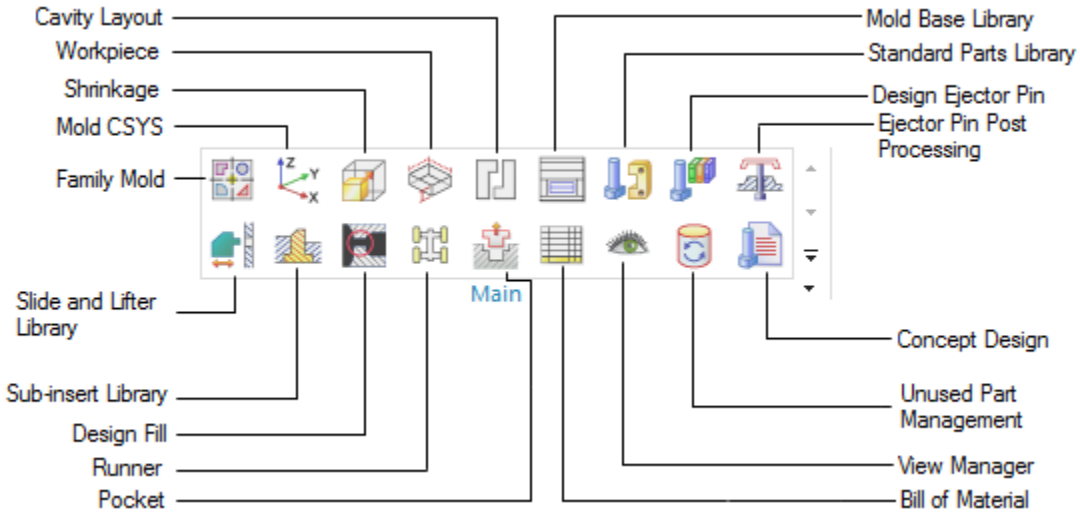

*Figure 1-21 The **Main** gallery*

Parting Tools Gallery

This gallery consists of tools which are used to create parting surface, core and cavity of the part. The tools in this gallery are **Check Regions**, **Patch Surface**, **Define Regions**, **Design Parting Surface**, **Edit Parting and Patch Surface**, **Define Cavity and Core**, **Swap Model**, **Back Up Parting/Patch Sheets**, and **Parting Navigator**, refer to Figure 1-22.

Evaluation Copy. Do not reproduce. For information visit www.cadcim.com

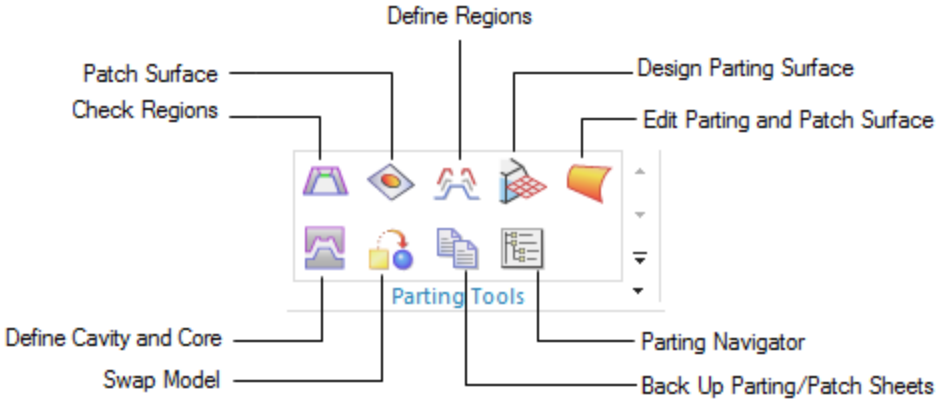

*Figure 1-22 The **Parting Tools** gallery*

Cooling Tools Gallery

This gallery consists of tools which are used to create cooling channels for cooling the material. The tools in this gallery are **Pattern Channel**, **Direct Channel**, **Define Channel**, **Connect Channels**, **Extend Channel**, **Adjust Channel**, **Cooling Fittings**, **Cooling Circuits**, and **Cooling Standard Part Library**, refer to Figure 1-23.

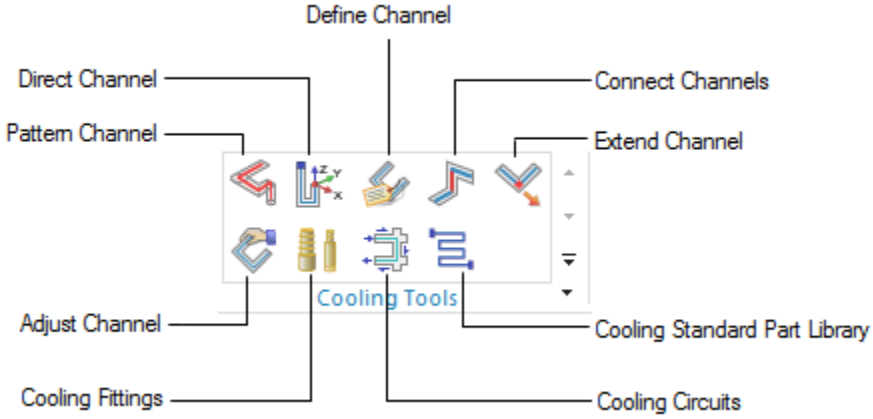

*Figure 1-23 The **Cooling Tools** gallery*

Mold Tools Gallery

This gallery consists of tools which are used to make mold design parts faster. The tools in this gallery are **Bounding Body**, **Split Body**, **Solid Patch**, **Trim Region Patch**, **Enlarge Surface Patch**, **Guided Extension**, **Extend Sheet**, **Split Face**, and so on, refer to Figure 1-24.

Evaluation Copy. Do not reproduce. For information visit www.cadcim.com

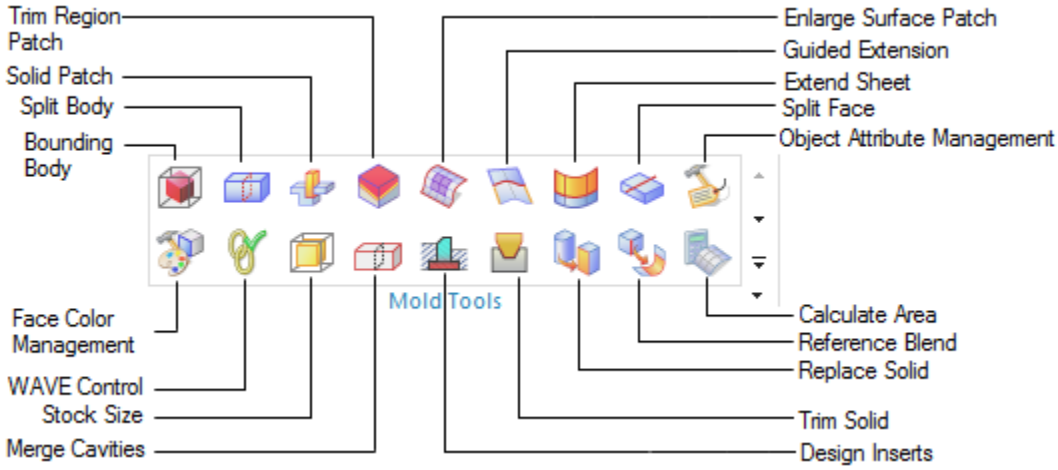

*Figure 1-24 The **Mold Tools** gallery*

Tooling Validation Gallery

This gallery consists of tools which are used for applying simulation to the mold assembly. The tools in this gallery are **Static Interference Check**, **Preprocess Motion**, **Define Slide**, **Define Lifter**, **User Defined Motion**, **Run Simulation**, and so on, refer to Figure 1-25.

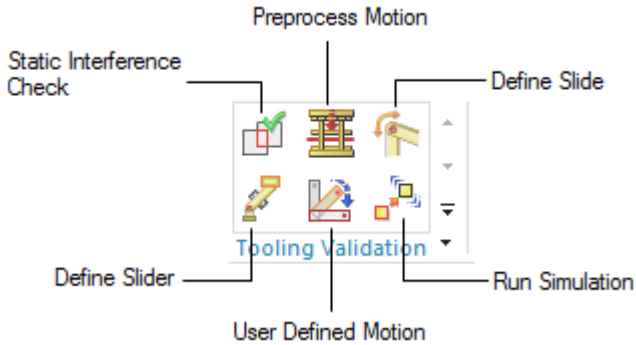

*Figure 1-25 The **Tooling Validation** gallery*

Mold Drawing Gallery

This gallery consists of tools which are used for creating detailed drawing of a mold. The tools in this gallery are **Assembly Drawing**, **Component Drawing**, **Hole Table**, **Auto Dimension**, **Hole Manufacturing Note**, **Ejector Pin Table** and so on, refer to Figure 1-26.

Evaluation Copy. Do not reproduce. For information visit www.cadcim.com

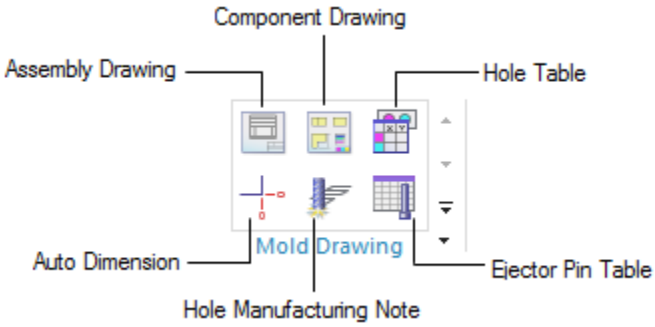

Figure 1-26 *The* ***Mold Drawing*** *gallery*

Casting Process Assistant Group (Customize to add)

This group consists of tools which are used to model product and tooling features for molded parts, refer to Figure 1-27.

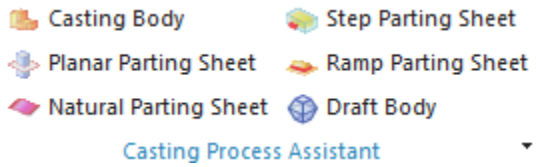

Figure 1-27 *The* ***Casting Process Assistant*** *group*

Easy Fill Advanced

To analyze the part, you need to add the **Easy Fill Advanced** plugin to NX. It helps you to do various things such as multi-gate analysis, packing, shrinkage, and fiber orientation, which are needed to validate mold design prior to manufacturing. These are discussed in detail in the next chapter.

Self-Evaluation Test

Answer the following questions and then compare them to those given at the end of this chapter:

1. You can process thermoplastic and _____ polymers to create component in injection molding machine.

2. There are _____ types of injection molds according to DIN IS0 standard 12165.

3. Register ring is _____ in shape.

4. There are _____ types of injection molding machines.

Evaluation Copy. Do not reproduce. For information visit www.cadcim.com

5. The _____ gallery is used to check the molded part quality.

6. The _____ gallery is used to create cooling channels.

7. Shrinkage is used to apply scale factor to the components. (T/F)

8. Gate is a channel which connects sprue bush to the components. (T/F)

9. Runner is a channel which connects sprue bush to the gate. (T/F)

10. Guide pillar and guide bush have tight fit between them. (T/F)

Review Questions

Answer the following questions:

1. Which of the following members is used to register a mold in the injection molding machine?

   (a) **Register Ring** (b) **Sprue Bush**
   (c) **Top Plate** (d) None of these

2. Which of the following members is used to clamp a mold on the stationary side of the injection molding machine?

   (a) Bottom Plate (b) Top Plate
   (c) Register Ring (d) None of these

3. Which of the following is not a type of gate according to the mold wizard library?

   (a) **Fan** (b) **Film**
   (c) **Tunnel** (d) **Hexagonal**

4. Which of the following is a type of runner according to the mold wizard library?

   (a) **Parabolic** (b) **Pin**
   (c) **Pin point** (d) **Step pin**

5. Which type of fit is used between guide pillar and guide bush?

   (a) **H7/s6** (b) **H7/u6**
   (c) **H7/r6** (d) **H7/g6**

Evaluation Copy. Do not reproduce. For information visit www.cadcim.com

EXERCISE

Exercise 1

Identify the name of the parts marked with numbers in Figure 1-28.

(Expected time: 10 min)

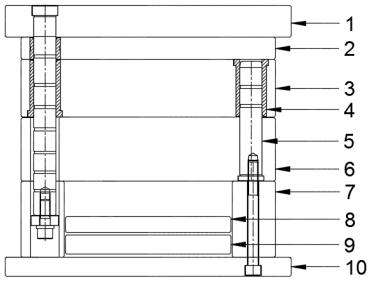

Figure 1-28 *Mold structure*

Evaluation Copy. Do not reproduce. For information visit www.cadcim.com

Answers to Self-Evaluation Test

1. thermosetting, **2.** 6, **3.** circular, **4.** 4, **5. Part Validation**, **6. Cooling Tools**, **7.** T, **8.** F, **9.** T, **10.** F

Evaluation Copy. Do not reproduce. For information visit www.cadcim.com